VIBRATION SYSTEMS & martin SOLUTIONS

FREE Engineering & Application Assistance

CALL TOLL-FREE **1-800-477-4634**

Safe, energy efficient, quiet **Industrial** Vibration Systems

© Martin Vibration System and Solutions, Inc. All rights reserved. • www.shake-it.com • sales@shake-it.com • 990 Degurse Ave Marine City, MI 48039

MARTIN® MT-FAST™ Hopper Trailer Vibrator

Hauling DDG, grains, or other difficult-to-unload materials in your hopper trailer can increase unloading time, create opportunities for operator injury, and potentially damage your equipment.

Introducing the MT-FAST™ Hopper Trailer Vibrator

A non-impacting linear vibrator that instantly attaches anywhere on the truck bed, the MT-FAST™ Vibrator has been proven to empty trailers quickly and completely, allowing even the most stubborn materials to flow more easily. With the MT-FAST™ Vibrator in place, drivers can empty large loads without having to hammer on the hopper walls to dislodge stuck-on material.

Weighing in at less than 10 lbs., the unit can be positioned strategically, right at the problem area, ensuring optimal material flow, unlike permanently mounted vibrators. Despite its light weight and portability, the vibrator packs 200 linear lbs. of force and can move even the most difficult materials. The MT-FAST™ Vibrator uses the rig's own air supply (less than 15 CFM required) – a unique patent-pending feature. The low-frequency, high-amplitude vibrator is best suited for low-density materials, like grain and meal. Operators can adjust the amplitude on the unit to suit specific needs, while the frequency is factory-set for optimal results.

FEATURES

The benefits of MT-FAST™ Hopper Trailer Vibrator include:

- Faster unloading
- Reduced downtime
- Improved operator safety
- Less damage to hopper and trap

MT-FAST™ Hopper Trailer Vibrator Specifications:

- Weight: < 10 lbs.
- Force: 200 linear force-lbs.
- Uses the rig's own air supply
- Portable
- Vacuum-mount
- Explosion-proof
- Washdown-safe

© Martin Vibration System and Solutions, Inc. All rights reserved.

MARTIN® MT-FAST™ Hopper Trailer Vibrator

PHOTOS

The VAC-MOUNT™ Portable Vibrator can be instantly attached to any part of the hopper, allowing material to flow easily from corners, valleys, and crevices.

The MT-FAST™ Vibrator uses the rig's own air supply (less than 15 CFM required). This feature is so unique that a patent is pending.

Without an MT-FAST™ Vibrator, operators have to climb under the trap and manually hammer, poke and prod on the hopper to release clogged material.

Competitors offer fixed-position piston vibrators. These products result in vibration at only a single point on the bin, damage to the bin at that point, inadequate vibration, and leaving the vibrator exposed to the elements. They regularly fail to empty the trailer completely.

MARTIN® MT-FAST™ Hopper Trailer Vibrator (Patent Pending)

© Martin Vibration System and Solutions, Inc. All rights reserved.

MARTIN® NTS™ 120-350 Non-Impacting Linear Vibrators

Lubrication-free! Quiet! Energy-efficient!

ATEX Certified

MARTIN® NTS™ 120-350 Non-Impacting Linear Vibrators provide powerful force to move materials in small bins and hoppers. The ability to control both the frequency and amplitude independently makes the MARTIN® NTS™ Vibrator a great choice for small feeder drives. Lubrication-free. Ideal for food, pharmaceutical and chemical applications. All Units are explosion-proof and wash-down safe. NTS 120, NTS 180, NTS 250 and NTS 350 body sizes are available in normal and high-frequency models.

All units are now available in stainless steel.

FEATURES

No Lubrication Required*

MARTIN® NTS™ Linear Vibrators are lubrication-free, eliminating the use of messy, maintenance-intensive lubricators. No oil mist is discharged into the atmosphere. *Lubrication is required when air is dried by refrigerant method.

Quiet

Noise levels are 60 to 65 dBA, well below regulatory limits.

Energy-Efficient

The most energy-efficient pneumatic vibrators available. Instant-on, instant- off. Frequency and amplitude adjust independently.

Sanitary Design

Special coating system sheds material buildup, won't flake off.

Durable

Perfect for high wash down areas.

Additional Specifications

- Air pressure range: 30-60 psi
- Operating temperature: 32°-250°F
- Air Preparation: 5-micron filter, pressure regulator & 3-way control valve.
- Force (maximum): 101 force-lbs.
- Warranty: 3-years when operated within recommendations.
- Included: Muffler, nipple & fasteners.

© Martin Vibration System and Solutions, Inc. All rights reserved.

MARTIN® NTS™ 120-350 Non-Impacting Linear Vibrators

DIMENSIONS

	A	A1	B	C	E	F	G	H	K	L
NTS 120 HF	3.84(97.5)	2.76(70)	1.08(27.5)	SW21	M 8	0.43(11)	0.65(16.5)	1.36(34.5)	1/8"	1/8"
NTS 120 NF	4.92(125)	3.84(97.5)	1.08(27.5)	SW21	M 8	0.43(11)	0.65(16.5)	1.91(48.5)	1/8"	1/8"
NTS 180 HF	4.27(108)	2.87(73)	1.32(33.5)	SW27	M 10	0.39(10)	0.77(19.5)	1.4(35.5)	1/4"	1/8"
NTS 180 NF	5.77(146)	4.35(110)	1.32(33.5)	SW27	M 10	0.39(10)	0.77(19.5)	2.12(53.8)	1/4"	1/8"
NTS 250 HF	5.73(145)	3.86(98)	1.64(41.5)	SW36	M 12	0.47(12)	0.94(24)	1.93(49)	3/8"	1/8"
NTS 250 NF	7.48(190)	5.55(141)	1.64(41.5)	SW36	M 12	0.47(12)	0.94(24)	2.78(70.5)	3/8"	1/8"
NTS 350 HF	5.77(146)	3.9(99)	2.09(53)	SW46	M 12	0.47(12)	1.2(30.5)	1.95(49.5)	3/8"	1/4"
NTS 350 NF	7.6(193)	5.71(145)	2.09(53)	SW46	M 12	0.47(12)	1.2(30.5)	2.85(72.5)	3/8"	1/4"
inches(mm)										

NTS™ 120-350 NON IMPACTING VIBRATORS

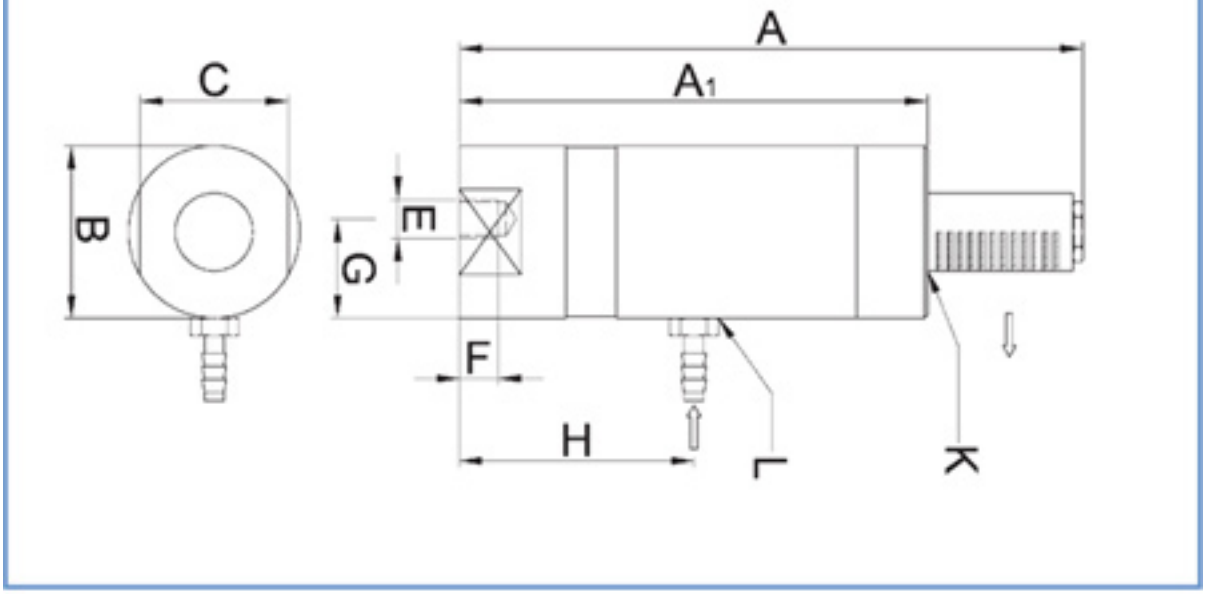

© Martin Vibration System and Solutions, Inc. All rights reserved.

MARTIN® NTS™ 120-350 Non-Impacting Linear Vibrators

PERFORMANCE

	WORKING MOMENT IN-LB. (CM-KG)		FREQUENCY		FORCE LBS. (N)		AIR CONSUMPTION CFM (L/MIN)	
	30 PSI(2 BAR)	60 PSI(4.1 BAR)	30 PSI(2 BAR)	60 PSI(4.1 BAR)	30 PSI(2 BAR)	60 PSI(4.1 BAR)	30 PSI(2 BAR)	60 PSI(4.1 BAR)
NTS 120HF	0.01(.018)	0.01(.018)	5775	7645	9(40)	14(63)	.35(10)	.81(36)
NTS 120NF	0.02(.038)	0.03(.046)	4185	4730	7(32)	12(52)	.25(7)	.46(19)
NTS 180HF	0.03(.035)	0.03(.045)	5582	7260	13(59)	26(116)	.53(15)	1.45(67)
NTS 180NF	0.09(.138)	0.13(.149)	3120	4037	15(68)	32(141)	.49(14)	1.25(57)
NTS 250HF	0.13(.152)	0.17(.190)	3940	4630	25(111)	53(235)	.74(21)	2.23(105)
NTS 250NF	0.31(.402)	0.46(.475)	2294	3630	27(119)	56(251)	.71(20)	2.11(99)
NTS 350HF	0.22(.208)	0.3(.308)	3960	4840	40(179)	90(399)	1.31(37)	3.04(135)
NTS 350NF	0.52(.756)	0.76(.932)	2355	3054	54(241)	109(486)	.92(26)	2.4(110)
NTS 100/01	.23(.33)	.3(.43)	3920	4640	63(281)	115(513)	1.17(33)	3.78(181)

PHOTOS

MARTIN® NTS™
on filling spout.

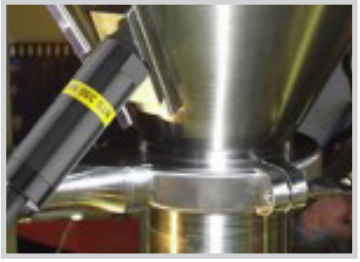

MARTIN® NTS™ 350 NF
on stainless steel hopper.

© Martin Vibration System and Solutions, Inc. All rights reserved.

MARTIN® NTS™ Non-Impacting Linear Vibrators

Quiet! Wash-down safe! Explosion-proof!

MARTIN® NTS™ Non-Impacting Linear Vibrators provide powerful force-to- move materials in bins and hoppers. The low-frequency, high-amplitude energy is best suited for larger particle sizes and light bulk densities. All bin vibrators are explosion-proof and wash-down safe. Linear motion, instant starting and stopping and repeatable performance make MARTIN® NTS™ Units ideal for feeder and screen drives, especially in hazardous duty locations or high wash-down areas.

MARTIN® NTS™ 100/01 Pneumatic Bowl Feeder Drive

ATEX Certified

The MARTIN® NTS™ 100/01 Vibrator is a quiet, reliable drive especially designed for use with bowl feeders. All Units are lube-free and feature independent adjustment of both amplitude and frequency. The Unit will interchange with BURGESS® and other pneumatic bowl feeder drives.

FEATURES

Quiet

Noise levels are 60 to 65 dBA, well below regulatory limits.

Energy-Efficient

The most energy-efficient pneumatic bin vibrators available. Instant on, instant off. Frequency and amplitude adjust independently.

Additional Specifications

- Air pressure range: 30-60 psi
- Operating temperature: 32°-250° F
- Air Preparation: 5-micron filter, pressure regulator lubricator & 3-way control valve, lubricator required.
- Force (maximum): 7059 force-lbs.
- Warranty: 3-years when operated within recommendations.
- Included: Muffler & nipple

© Martin Vibration System and Solutions, Inc. All rights reserved.

MARTIN® NTS™ Non-Impacting Linear Vibrators

DIMENSIONS

	A	B	C	D	E	F	G	H	I	K	L
NTS 100/01	3.5(89)	N/A	2.72(69)	N/A	M12	0.79(20)	2.58(65.5)	1.91(48.5)	1.24(31.5)	1/4"	1/4"
NTS 75/01	4.53(115)	3.54(90)	3.15(80)	2.83(72)	0.35(9)	0.79(20)	3.19(81)	2.36(60)	1.5(38)	1/4"	1/4"
NTS 50/01	6.1(155)	3.54(90)	3.11(79)	2.83(72)	0.35(9)	0.79(20)	4.76(121)	3.15(80)	1.57(40)	1/4"	1/4"
NTS 70/02	5.12(130)	4.33(110)	3.94(100)	3.54(90)	0.35(9)	0.79(20)	3.58(91)	2.56(65)	1.54(39)	3/8"	3/8"
NTS 54/02	6.18(157)	4.33(110)	3.94(100)	3.54(90)	0.35(9)	0.79(20)	4.41(112)	3.11(79)	1.77(45)	3/8"	3/8"
NTS 50/04	6.18(157)	6.18(150)	5.47(139)	4.88(124)	0.51(13)	0.79(20)	4.45(113)	3.11(79)	1.73(44)	3/8"	3/8"
NTS 50/08	6.81(173)	7.87(200)	6.69(170)	6.5(165)	0.67(17)	1.18(30)	4.92(125)	3.62(92)	2.28(58)	3/8"	3/8"
NTS 50/10	6.18(157)	7.87(200)	7.48(190)	6.5(165)	0.71(18)	0.79(20)	4.41(112)	3.11(79)	1.77(45)	3/8"	1/2"

inches (mm)

NTS™ NON-IMPACTING LINEAR VIBRATOR

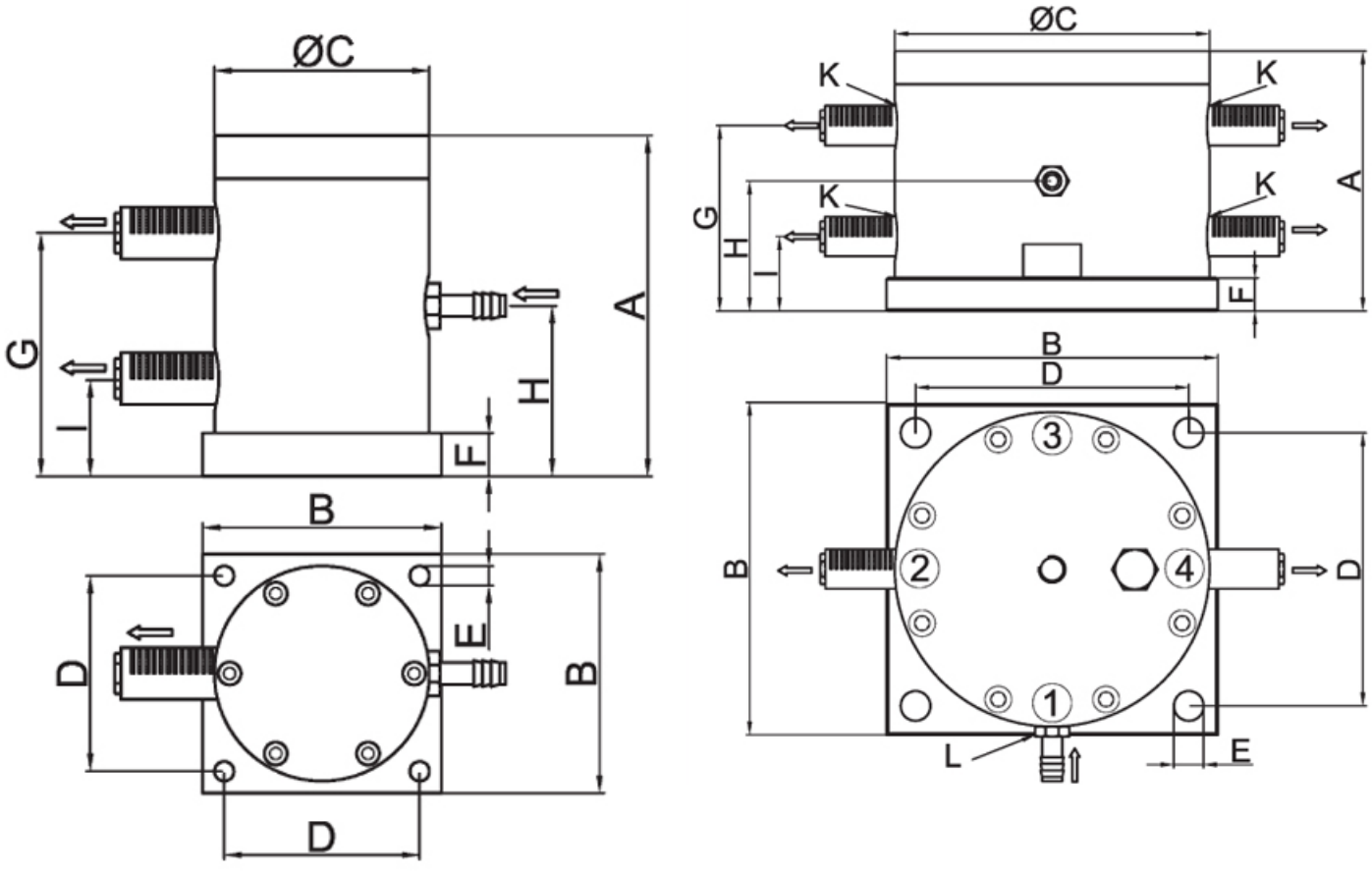

© Martin Vibration System and Solutions, Inc. All rights reserved.

MARTIN® NTS™ Non-Impacting Linear Vibrators

PERFORMANCE

	WORKING MOMENT IN-LB.(CM-KG)		FREQUENCY VPM		LINEAR FORCE LBS. (N)		AIR CONSUMPTION CFM (L/MIN)	
	30PSI(2BAR)	60PSI(4.1BAR)	30PSI(2BAR)	60PSI(4.1BAR)	30PSI(2BAR)	60PSI(4.1BAR)	LOW	HIGH
NTS 100/01	.29(.33)	.37(.43)	3920	4640	63(281)	115(513)	1.17(33)	3.78(181)
NTS 75/01	.87(1.01)	1.13(1.31)	2848	3596	101(451)	210(934)	3.5(99)	9.55(442)
NTS 50/01	1.89(2.18)	2.27(2.62)	1924	2408	99(442)	187(834)	3.11(88)	8.91(416)
NTS 70/02	2.43(2.81)	2.40(2.77)	2096	2808	152(676)	267(1186)	4.52(128)	12.21(564)
NTS 54/02	3.93(4.54)	4.77(5.51)	1730	2064	167(745)	290(1288)	5.37(152)	14.99(698)
NTS 50/04	6.84(7.9)	8.49(9.8)	1920	2296	358(1591)	639(2844)	9.57(271)	22.0(977)
NTS 50/08	9.79(11.3)	13.3(15.3)	1977	2331	545(2426)	1024(4555)	7.63(216)	18.02(803)
NTS 50/10	!2.5(14.5)	15.5(17.9)	1983	2392	703(3128)	1265(5626)	16(454)	37.1(1647)
inches (mm)								

APPLICATIONS

Best Uses for NTS™ Non-Impacting Linear Vibrators

Moving materials with low bulk density and/or large particles in bins & hoppers. Compaction table drives. Feeder drives.

PHOTOS

MARTIN® NTS™ Non-Impacting Linear Vibrator on compacting table.

MARTIN® NTS™ 100/01 Vibrator driving a bowl feeder in a hazardous location

MARTIN® NTS™ being used to enhance flow in a hopper.

MARTIN® NTS™ Non-Impacting Linear Vibrator on pipe.

MARTIN® NTS™ 50/10

© Martin Vibration System and Solutions, Inc. All rights reserved.

MARTIN® WEDGIE™ Portable Vibrator Mounting Systems

The MARTIN® WEDGIE™ Portable Vibrator Mounting System offers a quiet, positive solution for applications requiring removable vibrators. The inner surface of the patented vibration shoe is coated with a space-age plastic that transfers vibration but absorbs noise.

Choose between 3 vibrator types:

1. Lube-free, MARTIN® NTS™ Non-impacting Linear Vibrators.
2. MARTIN® PKL™ Single Impactors for a hammer-like blow.
3. 115 Volt Micro Electric Vibrators.

FEATURES

Quiet

Noise levels are 60 to 65 dBA, well below regulatory limits. Special mounting shoe reduces noise levels,yet transfers vibration efficiently.

Easy On, Easy Off

The vibrator assembly slides over the fixed V-section. The molded shoe conforms to the V-section. Just slide it on, vibrate, and slide it off.

Sanitary Design

Special coating systems on the vibrators shed material build up and won't flake off. The MARTIN® WEDGIE™ Mount is fabricated from 304 stainless steel.

Additional Specifications

- Air pressure range: 30-90 psi
- Operating temperature: 32°-250° F.
- Air Preparation: 5-micron filter, pressure regulator & lubricator for steel models. 3-way control valve required. (Included)
- Force (maximum): 93 force-lbs.
- Warranty: 3-years when operated within recommendations.
- US Patent #5,833,205

© Martin Vibration System and Solutions, Inc. All rights reserved.

MARTIN® WEDGIE™ Portable Vibrator Mounting Systems

DIMENSIONS

	A	B	C	D	E	F	G	H
NTS 180 NF WEDGIE	10(254)	6(152)	4.4(112)	5(127)	6.63(168)	7.75(197)	1.75(44)	1/8"
NTS 250 NF WEDGIE	10(254)	6(152)	4.4(112)	5(127)	7.63(194)	8.75(222)	1.75(44)	1/8"
NTS 350 NF WEDGIE	10(254)	6(152)	4.4(112)	5(127)	8.13(206)	9.25(235)	1.75(44)	1/4"
PKL 135/4 WEDGIE	10(254)	6(152)	4.4(112)	5(127)	11.88(302)	13(330)	1.75(44)	1/4"
PKL 135/6 WEDGIE	10(254)	6(152)	4.4(112)	5(127)	11.88(302)	13(330)	1.75(44)	1/4"
PKL 150/4 WEDGIE	10(254)	6(152)	4.4(112)	5(127)	13.13(333)	14.25(362)	1.75(44)	1/4"
PKL 150/6 WEDGIE	10(254)	6(152)	4.4(112)	5(127)	13.13(333)	14.25(362)	1.75(44)	1/4"
NEA 504 WEDGIE	10(254)	6(152)	4.4(112)	5(127)	3.38(86)	4.5(114)	1.75(44)	N/A
NEA 5020 WEDGIE	10(254)	6(152)	4.4(112)	5(127)	3.88(98)	5(127)	1.75(44)	N/A
inches (mm)								

WEDGIE™

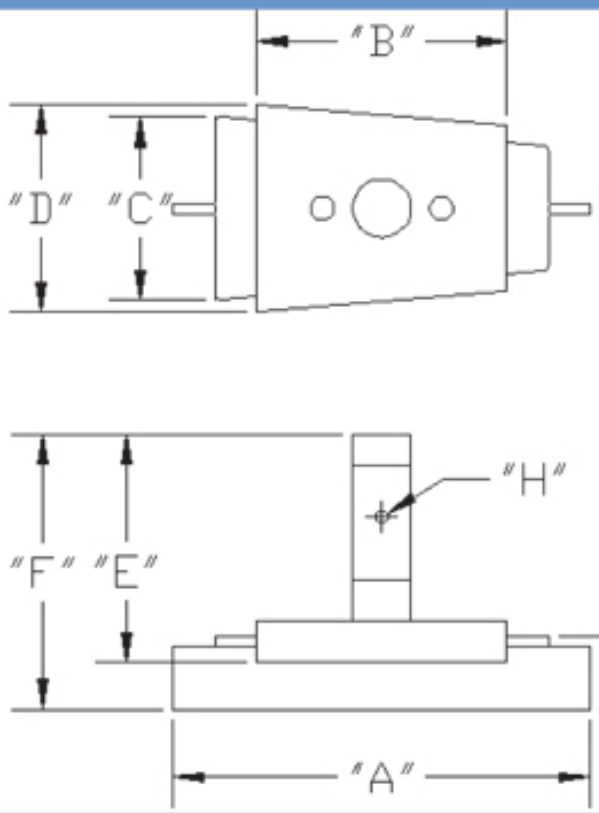

© Martin Vibration System and Solutions, Inc. All rights reserved.

MARTIN® WEDGIE™ Portable Vibrator Mounting Systems

PERFORMANCE

	MAX MATERIAL LOAD LBS.(KG)
NTS 180 NF WEDGIE	500(227)
NTS 250 NF WEDGIE	1000(455)
NTS 350 NF WEDGIE	2000(909)
PKL 135/4 WEDGIE	1000(455)
PKL 135/6 WEDGIE	1500(682)
PKL 150/4 WEDGIE	2000(909)
PKL 150/6 WEDGIE	2500(1136)
NEA 504 WEDGIE	200(91)
NEA 5020 WEDGIE	600(273)
inches(mm)	

PHOTOS

MARTIN® WEDGIE™
Portable Vibrator
Mounting System

MARTIN® WEDGIE™
Portable Vibrator
Mounting System

© Martin Vibration System and Solutions, Inc. All rights reserved.

MARTIN® NTP™ Continuous Impacting Linear Vibrators

MARTIN® NTP™ Continuous Impacting Linear Vibrators provide high-acceleration for removing sticky materials from vessel surfaces. A sanitary coating system, plus a tapped exhaust port make these units ideal for use in high wash down environments. Each unit is equipped with a cushioning strike plate assembly that reduces noise and stress on vessel walls. The instant on-instant-off operation of the MARTIN®NTP™ Series Vibrators combined with independent frequency and amplitude adjustment insures precise control. No over vibration!

Note: MARTIN® NTP™ Series Vibrators come complete with a urethane strike plate: Easy on the structure! Easy on the ears! Sanitary coating and tapped exhaust make these vibrators ideal for sanitary applications.

FEATURES

High-Acceleration

The impact provided by the MARTIN® NTP™ Series Units move material that will not respond to rotary vibration.

Wash-Down Safe

The sanitary coating system plus the tapped exhaust make for a completely sealed Unit. Perfect for high wash-down environments.

Precise Control

MARTIN® NTP™ Continuous Impacting Linear Vibrators are instant-on, instant- off. The frequency and amplitude are both adjustable providing the exact force required to do the job.

Additional Specifications

- Air Pressure Range: 30-60 psi.
- Operating Temperature: 32°-120° F
- Air Preparation: 5-micron filter, pressure regulator & lubricator. Muffler & hose nipple included. Lubricator required. NTP 32 & NTP 48.
- Force: 19-255 lbs.
- Warranty: 3-years when operated within recommendations.

© Martin Vibration System and Solutions, Inc. All rights reserved.

MARTIN® NTP™ Continuous Impacting Linear Vibrators

DIMENSIONS

	A	B	C	D	E	F	G	H	K	L	N
NTP 25	3.54(90)	2.36(60)	1.811(46)	0.26(7)	1/8	0.57(14.5)	1/8	0.59(15)	0.31(8)	2.01(51)	1/8
NTP 32	5.51(140)	2.95(75)	2.01(51)	0.43(11)	1/4	1.26(32)	1/4	0.79(20)	0.39(10)	2.76(70)	1/4
NTP 48	7.63(194)	3.94(100)	3.07(78)	0.51(13)	3/8	2.01(51)	3/8	0.98(25)	0.59(15)	3.74(95)	3/8
inches (mm)											

NTP 25

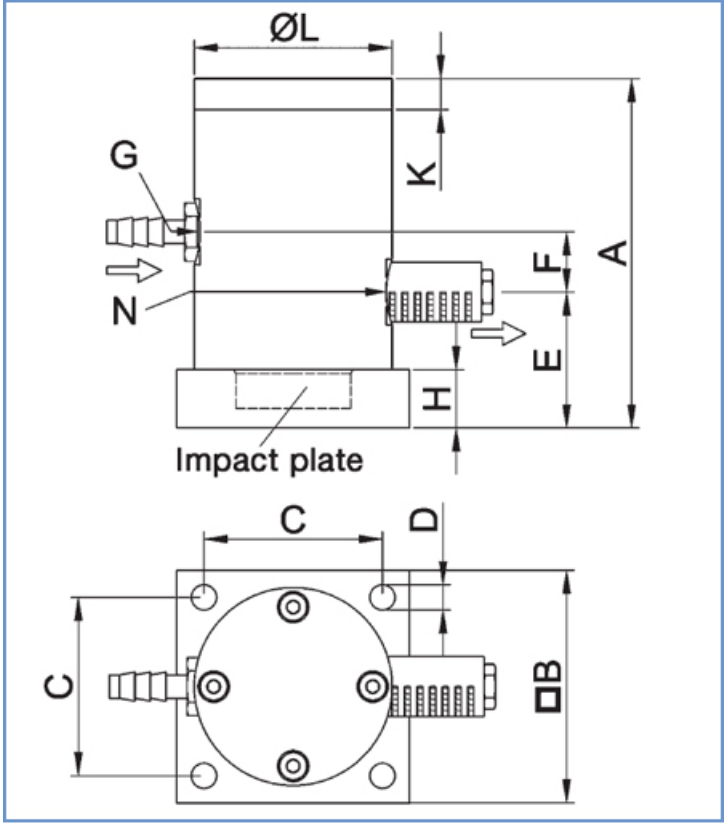

NTP 33 & 48

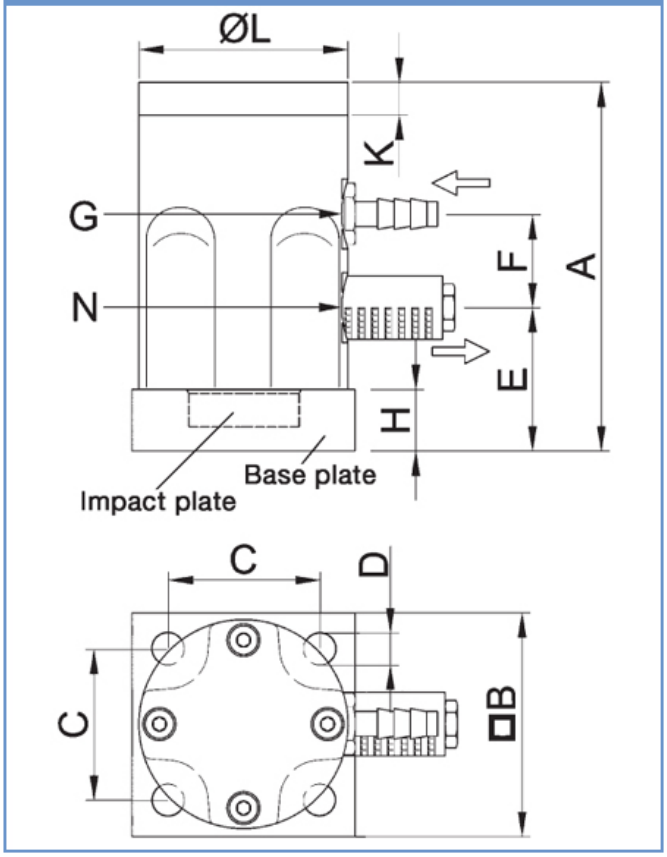

© Martin Vibration System and Solutions, Inc. All rights reserved.

MARTIN® NTP™ Continuous Impacting Linear Vibrators

PERFORMANCE

	FREQUENCY		LINEAR FORCE LBS. (N)		WORKING MOMENT IN.-LB. (CMKG)		AIR CONSUMPTION CFM (L/MIN)	
	30 PSI (2 BAR)	60 PSI (4.1 BAR)	30 PSI (2 BAR)	60 PSI (4.1 BAR)	30 PSI (2 BAR)	60 PSI (4.1 BAR)	30 PSI (2 BAR)	60 PSI (4.1 BAR)
NTP 25	2,830	3,550	19.8(269)	44(438)	0.17(.14)	0.24(.16)	1.2(33)	3.11(87)
NTP 32	2,100	2,500	59.6(289)	106(607)	0.95(.6)	1.15(.67)	1.2(50)	3.35(94)
NTP 48	1,200	1,500	61.8(782)	171(1305)	3(2.1)	4.94(2)	2.72(96)	8(224)
inches (mm)								

PHOTOS

MARTIN® NTP™ Continuous Impacting Vibrator aligning paper.

MARTIN® NTP™ 25 on stainless steel hopper.

Available in 3 new models.

© Martin Vibration System and Solutions, Inc. All rights reserved.

MARTIN® VAC-MOUNT™ Portable Vibrators

Instant vibration! No welding! No downtime!

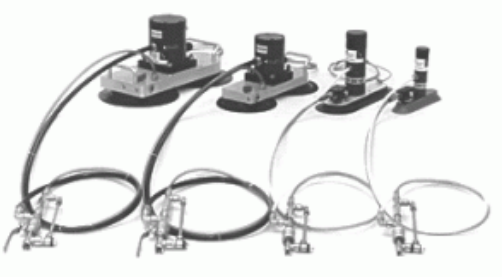

MARTIN® VAC-MOUNT™ Portable Vibrators are the answer for applications where ease of installation and/or maximum portability is required. The mounts are held in place by vacuum generated by a venturi system. Just place the unit against the vessel, turn the suction valve handle and you are ready to vibrate. This is the ideal solution for intermittent flow problems or for cleaning between batches. MARTIN® VAC-MOUNT™ Vibrators are the perfect tools for troubleshooting material-flow problems.

MARTIN® VAC-MOUNT™ Portable Vibrators are available in a variety of sizes including impacting, non-impacting and high-frequency models.

FEATURES

Easy To Use

Lightweight units provide “one worker” portability. The largest, most powerful unit weighs less than 37 lbs. All the controls required to operate the vibrator and mount are included.

Eliminates Guesswork

The vacuum mount helps pinpoint the best position for the placement of permanent vibrator installations.

Vibrates Portable Hoppers

Locate MARTIN® VAC-MOUNT™ assemblies at unloading stations. Instant attachment and controlled vibration eliminates destructive and expensive hammering.

Removes Residue Quickly

Attach a unit between batches to quickly and efficiently remove residue, reducing product waste and labor.

© Martin Vibration System and Solutions, Inc. All rights reserved.

MARTIN® VAC-MOUNT™ Portable Vibrators

PERFORMANCE

	MIN. REQUIRED MOUNTING SURFACE AREA		WEIGHT	AIR CONSUMPTION
	FLAT SURFACE	ROUND SURFACE	LBS. (KG)	CFM (L/MIN)
NTS 120NF VAC 10	8" X 3" (203 x 76)	4" (102)	5(2.3)	0.78(22)
NTS 180NF VAC 10	8" X 3" (203 x 76)	4" (102)	5(2.3)	0.78(22)
NTS 250 NF VAC 10	8" X 3" (203 x 76)	4" (102)	6(2.7)	0.78(22)
NTS 350 NF VAC 12	12" X 5" (305 x 127)	14" (356)	7(3.2)	1.27(36)
NTS 50/01 VAC 15	14" X 6" (356 x 152)	33" (838)	18(8.2)	1.84(52)
NTS 54/02 VAC 20	18" X 8" (457 x 203)	60" (1524)	24(10.9)	1.84(52)
NTS 50/04 VAC 20	18" X 8" (457 x 203)	60" (1524)	35(15.9)	1.84(52)
NCT-4 VAC 10	8" X 3" (203 x 76)	4" (102)	2(.9)	0.78(22)
NCT-10 VAC 12	12" X 5" (305 x 127)	14" (356)	6(2.7)	1.27(36)
NCT-29 VAC 15	14" X 6" (356 x 152)	33" (838)	9(4.1)	1.84(52)
NCT-108 VAC 20	18" X 8" (457 x 203)	60" (1524)	19(8.6)	1.84(52)
NTP-25 VAC 10	8" X 3" (203 x 76)	4" (102)	3(1.4)	0.78(22)
PKL 135/6 VAC 12	12" X 5" (305 x 127)	14" (356)	7(3.2)	1.27(36)
PKL 150/6 VAC 15	14" X 6" (356 x 152)	33" (838)	14(6.4)	1.84(52)
PKL 170/5 VAC 20	18" X 8" (457 x 203)	60" (1524)	37(16.8)	1.84(52)
PKL 220 VAC 20	18" X 8" (457 x 203)	60" (1524)	34(15.5)	1.84(52)
inches(mm)				

PHOTOS

MARTIN® VAC-MOUNT™ Portable Vibrators

MARTIN® VAC-MOUNT™ Vibrators are perfect for troubleshooting material flow problems.

MARTIN® VAC-MOUNT™ Portable Vibrators

Great for unloading, compaction, cleaning, and testing.

© Martin Vibration System and Solutions, Inc. All rights reserved.

MARTIN® NCT™ Rotary Turbine Vibrators

One third the air consumption of ball vibrators!

ATEX Certified

MARTIN® NCT™ Turbine Vibrators provide powerful, efficient, rotary vibratory force for activating solids in bins, hoppers, chutes, screens and feeders. These quiet vibrators are especially suited for fine, dry materials that respond to high-frequency. Parts handling, circuit board manufacturing and bottling plant applications are ideal for the MARTIN® NCT™ Series. Sanitary coating & lubrication-free operation - perfect for food and pharmaceutical applications.

Ideal For Harsh Environments

MARTIN® NCT™ Turbine Vibrators are sealed with o-rings. This sealing system keeps liquids out, even in the harshest of environments. On the right, a MARTIN® NCT™ Vibrator is shaking racks in a plating operation at a printed circuit board factory. Even when in constant contact with harsh chemicals, the MARTIN® NCT™ Turbines keep running.

FEATURES

No Lubrication Required

MARTIN® NCT™ Turbine Vibrators are lubrication-free, eliminating the use of messy, maintenance intensive lubricators. No oil mist is discharged into the atmosphere.

Quiet

Noise levels are 60 - 75 dBA, well below regulatory limits.

Energy-Efficient

MARTIN® NCT™ Turbine Vibrators use less than 1/3 the compressed air of ball- type units.

Additional Specifications

- Air Pressure Range: 30 - 60 psi.
- Operating Temperature: Max. 250° F.
- Air Preparation: 5-micron filter, pressure regulator.
- Force (maximum): 2700 force-lbs.
- Warranty: 3-years when operated within recommendations.
- Included: Muffler and nipple.

© Martin Vibration System and Solutions, Inc. All rights reserved.

MARTIN® NCT™ Rotary Turbine Vibrators

DIMENSIONS

	A	B	C	D	E	F	G	H	K
NCT 1 & 2	1.57(40)	1.06(27)	2.76(70)	2.2(56)	0.26(6.5)	1/8 BSP	1.18(30)	0.22(5.5)	0.39(10)
NCT 3, 4 & 4i	1.97(50)	1.26(32)	3.39(86)	2.68(68)	0.28(7)	1/8 BSP	1.57(40)	0.28(7)	0.47(12)
NCT 5, 10 & 10i	2.56(65)	1.69(43)	4.45(113)	3.54(90)	0.35(9)	1/4 BSP	1.97(50)	0.35(9)	0.63(16)
NCT 15, 29 & 29i	3.15(80)	2.2(56)	5.04(128)	4.09(104)	0.35(9)	1/4 BSP	2.36(60)	0.39(10)	0.63(16)
NCT 55, 108 & 108i	3.94(100)	2.87(73)	6.3(160)	5.12(130)	0.51(13)	3/8 BSP	3.15(80)	0.47(12)	0.79(20)
NCT 126, 250 & 250i	4.72(120)	3.39(86)	7.64(194)	5.98(152)	0.67(17)	3/8 BSP	3.94(100)	0.51(13)	
inches(mm)									

NCT ROTARY VIBRATOR

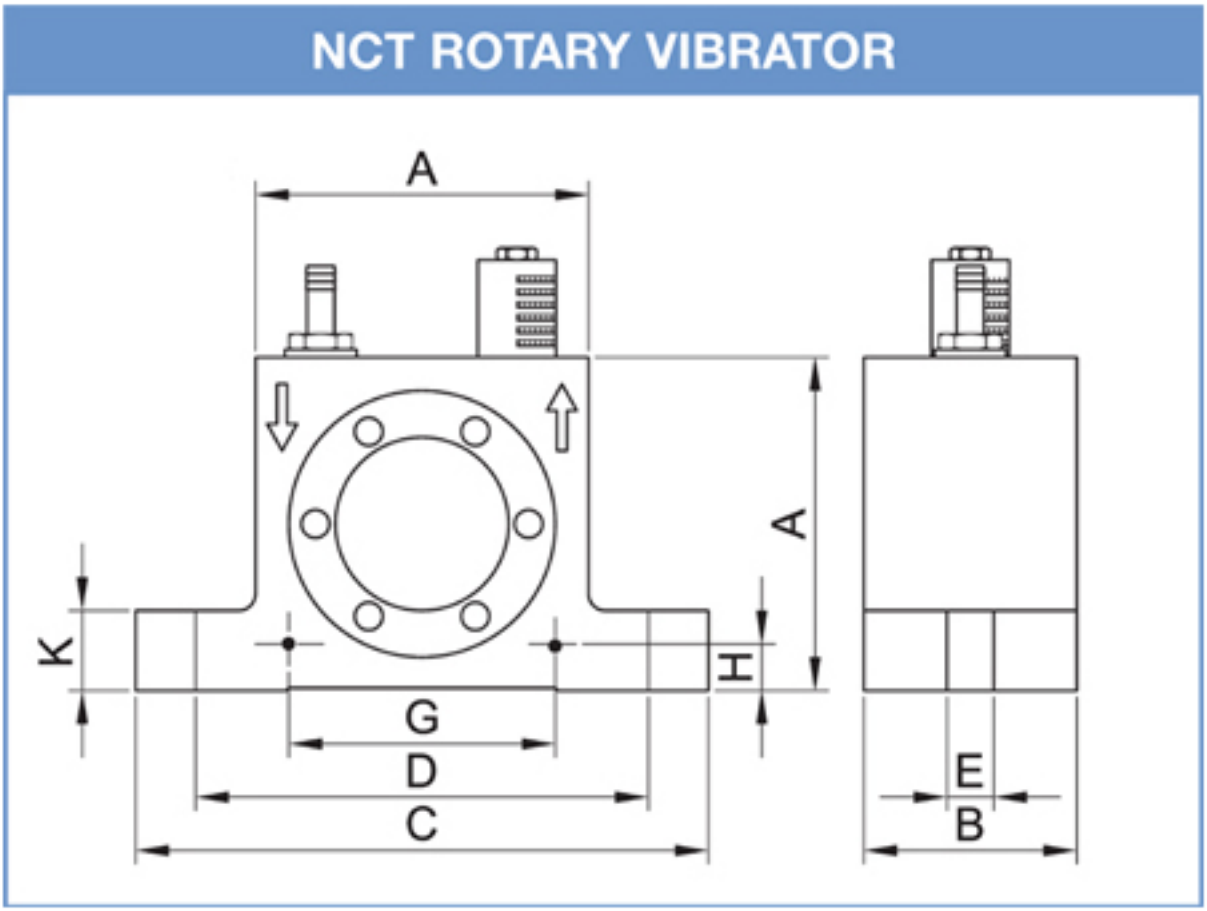

© Martin Vibration System and Solutions, Inc. All rights reserved.

MARTIN® NCT™ Rotary Turbine Vibrators

PERFORMANCE

	FREQUENCY		FORCE LBS. (N)		AIR CONSUMPTION CFM (L/MIN)	
	30 PSI(2 BAR)	60 PSI(4.1 BAR)	30 PSI(2 BAR)	60 PSI(4.1 BAR)	30 PSI(2 BAR)	60 PSI(4.1 BAR)
NCT 1	29100	38820	65(288)	115(513)	0.67(19)	1.13(32)
NCT 2	21360	29520	70(311)	134(594)	0.71(20)	1.21(34)
NCT 3	26940	34900	143(637)	240(1069)	0.99(28)	1.82(52)
NCT 4	21740	26920	134(597)	206(915)	1.09(31)	1.84(52)
NCT 4i	14020	18560	111(496)	195(869)	1.09(31)	1.87(53)
NCT 5	22740	27840	312(1389)	468(2082)	3.28(93)	6.64(189)
NCT 10	16940	20680	339(1511)	506(2251)	3.25(92)	6.68(190)
NCT 10i	12200	14680	352(1567)	510(2269)	3.28(93)	6.69(190)
NCT 15	15740	20060	489(2174)	794(3530)	7.59(215)	11.95(338)
NCT 29	11920	14760	494(2197)	757(3369)	7.63(216)	11.97(339)
NCT 29i	7360	10240	377(1676)	729(3243)	7.52(213)	11.96(338)
NCT 55	11000	13980	813(3618)	1314(5845)	13.6(386)	23(652)
NCT 108	8280	10420	914(4067)	1448(6441)	13.4(379)	22.8(645)
NCT 108i	4900	6860	643(2860)	1257(5590)	13.8(392)	23.25(660)
NCT 126	6060	8280	582(2591)	1070(4760)	23.1(653)	41.7(1180)
NCT 250	5500	7020	933(4152)	1520(6761)	23.2(655)	41.75(1183)
NCT 250i	N/A	5100	N/A	1603(7131)	N/A	52.2(1477)
inches(mm)						

PHOTOS

MARTIN® NCT™ Rotary Turbine Vibrator unloading big bags.

MARTIN® NCT™ Rotary Turbine Vibrator on chute.

MARTIN® NCT™ Rotary Turbine Vibrator in use.

© Martin Vibration System and Solutions, Inc. All rights reserved.

MARTIN® NCB™ Sanitary Ball Vibrators

Sanitary coating—perfect for food and pharmaceutical applications!

MARTIN® NCB™ Ball Vibrators provide powerful, efficient, rotary vibratory force for activating solids in bins, hoppers, chutes, screens and feeders. These vibrators are especially suited for fine, dry materials that respond to high-frequency. Parts handling, circuit board manufacturing and bottling plant applications are ideal for the MARTIN® NCB™ Ball Vibrator Series.

FEATURES

Sanitary

Special coating system sheds material and will not flake off. The end cap is stainless steel. MARTIN® NCB™ Ball Vibrators are wash-down safe and explosion-proof.

Interchangeable

The MARTIN® NCB™ Ball Vibrators are totally interchangeable with the MARTIN® NCT™ Turbine Vibrators. This is important if the usage of the vibrator increases or the noise level needs to be reduced. MARTIN® NCT™ Turbine Vibrators should be used if the units operate more than 3 hours per day or if the vibrators must operate in a lubrication-free environment. The noise level reductions gained from the MARTIN® NCT™ Turbine Vibrators are from 5-20 dBA.

Additional Specifications

- Air pressure range: 30 – 60 psi
- Operating Temperature: Max. 250° F
- Air Preparation: 5-micron filter, pressure regulator, lubricator
- Force (maximum): 1,434 force-lbs.
- Warranty: 1-year when operated within recommendations.
- Included: Muffler and nipple.

© Martin Vibration System and Solutions, Inc. All rights reserved.

MARTIN® NCB™ Sanitary Ball Vibrators

DIMENSIONS

	A	B	C	D	E	F	G	H	K
NCB 1	1.97(50)	0.71(18)	3.39(86)	2.68(68)	0.28(7)	1/8"	1.57(40)	0.3(7)	0.47(12)
NCB 2	1.97(50)	0.71(18)	3.39(86)	2.68(68)	0.28(7)	1/8"	1.57(40)	0.28(7)	0.47(12)
NCB 3	2.56(65)	1.02(26)	4.45(113)	3.54(90)	0.35(9)	1/4"	1.97(50)	0.35(9)	0.63(63)
NCB 5	2.56(65)	1.02(26)	4.45(113)	3.54(90)	0.35(9)	1/4"	1.97(50)	0.35(9)	0.63(16)
NCB 10	3.15(80)	1.46(37)	5.04(128)	4.09(104)	0.35(9)	1/4"	2.36(60)	.39(10)	0.63(16)
NCB 20	3.15(80)	1.46(37)	5.04(128)	4.09(104)	0.35(9)	1/4"	2.36(60)	.39(10)	0.63(16)
NCB 50	3.94(100)	1.97(50)	6.3(160)	5.12(130)	0.43(11)	3/8"	3.15(80)	0.47(12)	0.79(20)
NCB 70	3.94(100)	1.97(50)	6.3(160)	5.12(130)	0.43(11)	3/8"	3.15(80)	0.47(12)	0.79(20)
inches (mm)									

NCB SANITARY BALL VIBRATOR

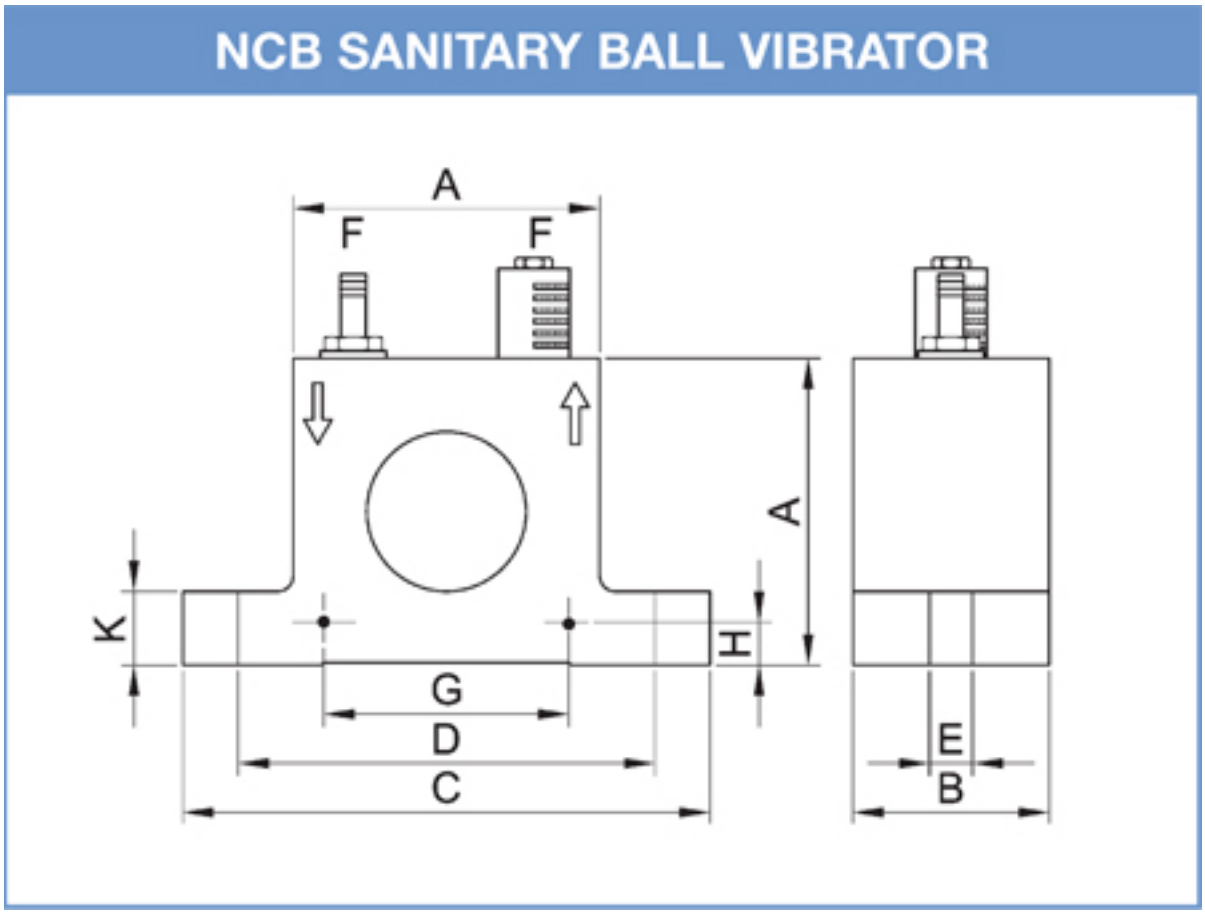

© Martin Vibration System and Solutions, Inc. All rights reserved.

MARTIN® NCB™ Sanitary Ball Vibrators

PERFORMANCE

	FREQUENCY		FORCE LBS. (N)		AIR CONSUMPTION CFM(L/MIN)	
	30psi (2bar)	60psi (4.1bar)	30psi (2bar)	60psi (4.1bar)	30psi (2bar)	60psi (4.1bar)
NCB 1	28460	37060	62(276)	107(476)	1.6(45)	2.9(82)
NCB 2	22880	31160	93(414)	145(645)	1.7(48)	3(85)
NCB 3	17100	21600	116(516)	176(783)	2.7(76)	5(142)
NCB 5	15220	19180	133(592)	209(930)	2.7(76)	5.2(147)
NCB 10	11320	14380	233(1037)	364(1620)	4.7(133)	9.5(269)
NCB 20	10560	13780	356(1584)	540(2403)	4.7(133)	9.7(275)
NCB 50	7220	9940	334(1486)	487(2167)	7.4(209)	17.8(504)
NCB 70	7220	8820	754(3355)	1162(5171)	9.8(277)	17.4(492)
inches (mm)						

PHOTOS

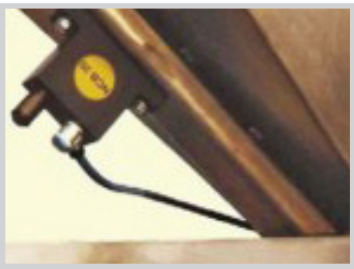

MARTIN® NCB™ ball vibrator used on small hooper.

Sanitary coating - perfect for food and pharmaceutical applications.

© Martin Vibration System and Solutions, Inc. All rights reserved.

NTK® Oscillators

A great motive force for compaction tables, feeders & screens!

ATEX Certified

Compact, settle, feed or screen – move material efficiently with NTK® Oscillators. Operation is quiet, and energy-efficient. NTK® Units start and stop instantly in any position and are explosion-proof and wash-down safe. Aluminum Units operate lubrication-free. No one builds industrial vibrators like MARTIN®!

FEATURES

No Lubrication Required

AL models are lubrication-free, eliminating the use of messy, maintenance-intensive lubricators. No oil mist is discharged into the atmosphere.

Quiet

Noise levels are 60 to 75 dBA, well below regulatory limits.

Infinite Adjustability

NTK® Oscillators offer separate and independent adjustment of both frequency and amplitude, providing exactly the right force time after time.

Additional Specifications

- Air pressure range: 30-60 psi
- Operating temperature: 32° - 120° F, special low & high temperature models available.
- Air Preparation: 5-micron filter, pressure regulator & lubricator for steel models. 3-way control valve required.
- Force (maximum): 7-900 force-lbs.
- Warranty: 3-years when operated within recommendations.
- Included: Muffler, nipple & mounting bolts.

© Martin Vibration System and Solutions, Inc. All rights reserved.

NTK® Oscillators

DIMENSIONS

	A	B	C	D	E	F	G	
NTK 8 AL	0.32(8)	0.87(22)	3.58(91)	0.88(22)	0.2(5)	1.26(32)	0.73(18.5)	
NTK 25 AL	0.99(25)	1.97(50)	5.44(138)	2.13(54)	0.28(7)	2.05(52)	1.16(29.5)	
NTK 40 AL	1.58(40)	2.88(73)	5.52(140)	3.11(79)	0.47(12)	2.25(57)	1.36(34.5)	
NTK 55 AL	2.17(55)	3.88(98)	5.24(133)	4.29(109)	0.79(20)	2.29(58)	1.52(38.5)	

	H & J	K	L & M	R	S	T	U	SW
NTK 8 AL	M 5	N/A	M5	0.59(15)	0.28(7)	1.85(47)	3.01(77)	0.28(7)
NTK 25 AL	M 16	N/A	G 1/4	0.98(25)	0.71(18)	2.84(72)	4.75(121)	0.87(22)
NTK 40 AL	M 16	0.32(8)	G 3/8	0.98(25)	0.79(20)	2.88(73)	4.83(123)	1.26(32)
NTK 55 AL	M 20	0.39(10)	G 3/8	1.58(40)	1.38(35)	2.60(66)	4.53(115)	1.81(46)
inches (mm)								

	A	B	C	E	F	G	H	J	
NTK 15 X	0.59(15)	1.97(50)	4.49(114)	0.35(9)	1.5(38)	0.93(24)	M 10	N/A	
NTK 16	0.63(16)	1.93(49)	4.37(111)	0.2(5)	1.5(38)	0.85(22)	M 10	N/A	
NTK 18 AL	0.71(18)	1.93(49)	4.57(116)	0.31(8)	1.65(42)	0.98(25)	M 10	N/A	
NTK 25	0.98(25)	2.52(64)	5.43(138	0.35(9)	2.05(52)	1.20(31)	M 16	N/A	
NTK 40	1.57(40)	3.31(84)	5.51(140)	0.47(12)	2.13(54)	1.30(33)	M 16	N/A	
NTK 55	2.17(55)	4.33(110)	4.92(125)	0.75(19)	2.17(55)	1.50(38)	M 20	3.78(96)	
NTK 85	3.35(85)	6.3(160)	4.80(122)	0.79(20)	1.77(45)	1.28(33)	M 20	5.63(143)	
NTK 110	4.33(110)	7.87(200)	4.80(122)	0.87(22)	2.17(55)	1.52(39)	M 20	7.17(182)	

	K	L	M	Q	R	S	T	U	SW
NTK 15 X	N/A	G 1/8	G 1/8	N/A	0.79(20)	0.39(10)	2.17(55)	3.90(99)	0.5(13)
NTK 16	N/A	G 1/8	G 1/8	N/A	0.83(21)	0.39(10)	2.24(57)	3.78(96)	0.55(14)
NTK 18 AL	N/A	G 1/8	G 1/8	N/A	0.83(21)	0.39(10)	2.44(62)	3.98(101)	0.63(16)
NTK 25	N/A	G 1/4	G 1/4	N/A	0.98(25)	0.39(10)	2.87(73)	4.92(125)	0.87(22)
NTK 40	N/A	G 3/8	G 1/4	N/A	1.57(40)	0.59(15)	2.87(73)	4.84(123)	1.26(32)
NTK 55	N/A	G 3/8	G 3/8	4 ˘ 8,5	1.57(40)	1.18(30)	2.36(60)	4.25(108)	1.811(46)
NTK 85	0.50(13)	2 x G 3/8	G 3/8	6 ˘ 10,0	1.57(40)	0.79(20)	2.24(57)	4.13(105)	N/A
NTK 110	0.50(13)	2 x G1/2	2 x G 3/8	8 ˘ 12,5	1.57(40)	0.98(25)	2.24(57)	4.13(105)	N/A
inches (mm)									

© Martin Vibration System and Solutions, Inc. All rights reserved.

NTK® Oscillators

NTK AL

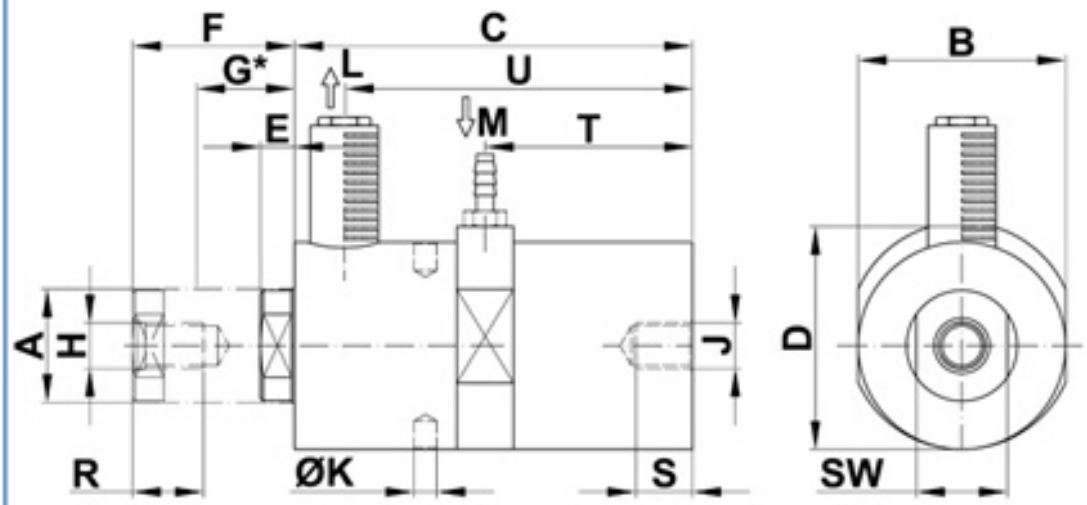

NTK STEEL

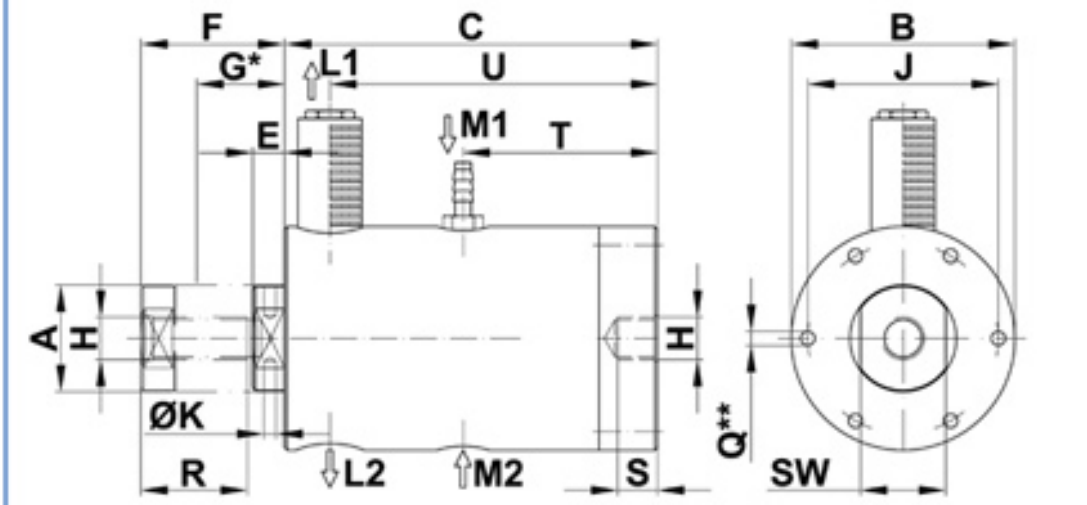

© Martin Vibration System and Solutions, Inc. All rights reserved. • www.shake-it.com • sales@shake-it.com • 990 Degurse Ave Marine City, MI 48039

NTK® Oscillators

PERFORMANCE

			AIR CONSUMPTION CFM (L/MIN)		FREQUENCY		CENTRIFUGAL FORCE LBS (N)		WORKING MOMENT IN/LB (CMKG)	
NTK	OSCILLATION MASS LBS(KG)	OSCILLATOR ASSEMBLY	30 PSI (2BAR)	60 PSI (4.1BAR)	30 PSI (2BAR)	60 PSI (4.1BAR)	30 PSI (2BAR)	60 PSI (4.1BAR)	30 PSI (2BAR)	60 PSI (4.1BAR)
8 AL	0.07(.03)	piston only	0.25(7)	0.7(20)	2440	3120	3.3(15)	7.1(32)	0.04(.05)	0.05(.06)
	0.10(.05)	+ SM 8-1	0.21(6)	0.66(19)	1858	2412	3.5(16)	7.1(32)	0.07(.08)	0.09(.10)
	0.13(.06)	+ 2x8-1	0.21(6)	0.63(18)	1680	2100	3.1(14)	7.1(32)	0.08(.09)	0.12(.14)
	0.19(.09)	+ SM 8-2	0.21(6)	0.56(16)	1380	1333	3.3(15)	8(36)	0.13(.15)	0.32(.37)
15 x	0.3(.14)	piston	0.6(17)	1.58(45)	1745	2182	10.9(49)	18.9(85)	0.25(.29)	0.29(.33)
	1.0(46)	+ SM 16-1	0.56(16)	1.3(37)	1029	1137	10.4(47)	18.9(85)	0.70(.81)	1.01(1.17)
	1.49(.68)	+ SM 16-2	0.5(14)	1.19(34)	758	720	11.8(53)	19.3(87)	1.47(1.69)	2.66(3.06)
16	0.33(.15)	piston	0.5(14)	1.26(36)	1680	1920	9.3(42)	16.7(75)	0.23(.27)	0.32(.37)
	1.03(.47)	+ SM 16-1	0.39(11)	0.98(28)	908	1309	9.3(42)	30.8(139)	0.99(1.14)	1.28(1.48)
	2.18(.99)	+ SM 16-1+SM 16-2	0.28(8)	0.88(25)	686	914	16.9(76)	30.9(139)	2.57(2.96)	2.62(3.02)
18 AL	0.46(.21)	piston	0.67(19)	1.54(44)	1600	1980	9.3(42)	15.5(70)	0.25(.29)	0.29(.33)
	1.39(.63)	+ SM 16-1	0.46(13)	1.26(36)	972	1321	13.6(61)	31.3(141)	1.02(1.18)	1.28(1.47)
	1.65(.75)	+ SM 16-2	0.39(11)	1.19(34)	878	1168	18.4(83)	38(171)	1.70(1.96)	1.99(2.29)
	2.31(1.05)	+ SM 16-1+SM 16-2	0.35(10)	1.05(30)	738	965	21.8(98)	37.1(167)	2.84(3.27)	2.84(3.27)
	2.79(1.27	+ 2 x SM 16-2	0.32(9)	0.98(28)	702	902	23.1(104)	40.9(184)	3.35(3.86)	3.58(4.13)
25 AL	0.92(.42)	piston	1.19(34)	3.22(92)	1289	1821	23.8(107)	55.6(250)	1.02(1.18)	1.2(1.38)
	1.70(.78)	+ SM 25-1	0.91(26)	2.87(82)	988	1371	30.9(139)	67.6(304)	2.25(2.59)	2.56(2.95)
	2.13(.97)	+ SM 25-2	0.84(24)	2.66(76)	894	1237	34.4(155)	72(324)	3.07(3.54)	3.35(3.86)
	3.64(1.66)	+ SM 25-3	0.77(22)	2.42(69)	686	898	39.3(177)	68.2(307)	5.97(6.88)	6.02(6.94)
	6.25(2.84)	+ 2 x SM 25-3	0.74(21)	2.21(63)	540	823	41.8(188)	94.4(425)	10.23(11.79)	9.95(11.5)
25	1.03(.47)	piston	1.33(38)	3.39(97)	1440	1946	28.2(127)	62.6(282)	0.97(1.12)	1.18(1.36)
	2.24(1.02)	+ SM 25-2	0.98(28)	2.52(72)	993	1320	36.9(166)	76.9(346)	2.66(3.07)	3.14(3.62)
	3.75(1.71)	+ SM 25-3	0.88(25)	2.28(65)	800	988	43.6(196)	76.2(343)	4.84(5.58)	5.56(6.41)
40 AL	2.73(1.24)	piston	1.89(54)	4.8(137)	1231	1620	53.1(239)	84.4(380)	2.5(2.88)	2.29(2.64)
	5.44(2.48)	+ SM 25-3	1.26(36)	4.30(123)	900	1168	66.2(298)	139(628)	5.83(6.72)	7.29(8.4)
	8.05(3.66)	+ 2 x SM 25-3	1.19(34)	3.64(104)	710	923	80.2(361)	137(617)	11.35(13.08)	11.46(13.2)
	10.80(4.91)	+ SM 25-4	1.16(33)	3.26(93)	565	780	94.2(424)	153(689)	21.04(24.24)	17.92(20.6)
40	2.79(1.27)	piston	1.72(49)	4.86(139)	1200	1629	62.7(282	115(520)	3.1(3.57)	3.01(3.57)
	5.51(2.51)	+ SM 25-3	1.33(38)	3.96(113)	889	1175	71.1(320)	145(653)	6.41(7.39)	7.48(8.62)
	8.19(3.69)	+ 2 x SM 25-3	1.23(35)	3.5(100)	673	933	66.7(300	150(677)	10.48(12.07)	12.3(14.17)
	10.87(4.94)	+ SM 25-4	1.12(32)	3.22(92)	554	778	101(456)	167(753)	23.52(27.1)	19.68(22.67)
55 AL	4.62(2.1)	piston	3.43(96)	8.68(248)	1500	1920	99.3(447)	157(708)	3.14(3.62)	3.04(3.5)
	7.57(3.43)	+ SM 85-1	2.91(83)	8.19(234)	1113	1440	109(492)	183(824)	6.29(7.25)	6.29(7.25)
	10.14(4.61)	+ 2 x SM 85-1	2.835(81)	7.91(226)	985	1292	131(591)	221(995)	9.64(11.11)	9.44(10.87)
	12.91(5.87)	+ SM 85-2	2.77(79)	7.80(223)	884	1175	138(621)	243(1097)	12.58(14.49)	12.58(14.5)
	18.23(8.29)	+ 2x SM 85-1 + SM 85-2	2.56(73)	7.49(214)	758	1011	160(723)	276(1244)	19.92(22.94)	19.29(22.22)
55	4.62(2.1)	piston NF	3.54(101)	8.93(255)	1405	1879	98(441)	154(696)	3.54(4.08)	3.12(3.6)
	10.14(4.61)	+ 2 x SM 85-1	2.42(69)	7.24(207)	973	1358	127(573)	264(1189)	9.57(11.03)	10.2(11.75)
	15.51(7.05)	+ 2x SM 85-1 + SM 85-2	2.20(63)	6.72(192)	853	1140	167(755)	311(1401)	16.44(18.94)	17.06(19.66)
	32.19(14.63)	+ SM 85-3	2.17(62)	6.65(190)	677	862	230(1039)	380(1708)	35.91(41.37)	36.43(41.97)
85	11.44(5.2)	piston NF	5.81(166)	12.46(356)	1892	2400	170(767)	328(1474)	3.39(3.91)	4.05(4.67)
	14.37(6.53)	+ SM 85-1	5.84(167)	12.46(356)	1622	2108	202(910)	355(1597)	5.48(6.31)	5.69(6.56)
	19.73(8.97)	+ SM 85-2	5.56(159)	12.18(348)	1345	1714	211(950)	361(1626)	8.32(9.58)	8.76(10.09)
	38.5(17.5)	+ SM 85-3	4.48(128)	11.24(321)	894	1166	248(1116)	439(1975)	22.11(25.47)	22.98(26.48)
	46.2(21)	+ SM 85-2 + SM 85-3	4.2(120)	10.96(313)	821	1060	263(1187)	449(2021)	27.91(32.16)	28.46(32.79)
	63.58(28.9)	+ SM 85-4	3.88(111)	10.60(303)	707	879	276(1244)	487(2191)	39.41(45.4)	44.88(51.7)
	89.65(40.7)	+ SM 85-5	3.60(103)	9.73(278)	592	784	296(1333)	566(2548)	60.20(69.36)	65.67(75.66)
110	17.6(8)	piston	7.35(210)	15.08(431)	2133	2571	334(1505)	634(2852)	5.23(6.03)	6.83(7.87)
	25.89(11.7)	+ SM 85-2	7.32(209)	15.05(430)	1760	2160	346(1559)	641(2884)	7.97(9.18)	9.78(11.27)
	45.17(20.5)	+ SM 85-3	7.21(206)	14.66(419)	1324	1655	364(1638)	665(2993)	14.79(17.04)	17.3(19.93)
	53(24)	+ SM 85-2 + SM 85-3	7.10(203)	14.56(416)	1200	1527	372(1677	671(3018)	18.44(21.24)	20.48(23.6)
	70.38(32)	+ SM 85-4	6.68(191)	14.10(403)	1046	1292	398(1794)	667(3001)	25.94(29.89)	28.45(32.78)
	97.8(44.5)	+ SM 85-5	6.3(180)	13.76(393)	900	1143	381(1718)	709(3192)	33.57(38.67)	38.60(44.57)

inches (mm)

© Martin Vibration System and Solutions, Inc. All rights reserved.

NTK® Oscillators

PHOTOS

Problem: Material traveling on a conveyor belt needed compaction. Solution: A special compaction table was designed to allow the top strand of the belt to be shaken by an NTK® 40 AL Oscillator. The return strand passed through the “middle” of the table.

Problem: Fine material was building up on the walls of a fill tube. Solution: An NTK® 25 AL Oscillator, operated by a timer, taps on the pipe, 5 seconds/ minute, eliminating the build-up.

A small roller compaction table compacts boxes of powder as they are packaged. The drive is a lubrication-free NTK® 25 AL Oscillator.

A cereal manufacturer needed to separate and spread the individual pieces of product before they were coated. The shaking zone is isolated, by springs, from the mainframe. An NTK® Oscillator is fastened to the shaking zone frame, vibrating the conveyor belt and cereal.

MARTIN® NTK® Oscillator tapping on plastic hopper.

Separating donuts in a bakery for faster drying time.

© Martin Vibration System and Solutions, Inc. All rights reserved.

MARTIN® Ball Vibrators

Vibrolator® Pneumatic Ball Vibrators provide high-frequency vibration at an economical price. The only moving part is a high-grade chrome steel ball. Lubrication, while not required, extends the life of the units.

The best uses for this series are small hoppers, parts feeders, chutes and match plates. Air consumption for these units is moderate. If the application requires more than three hours per day of operation or requires lubrication-free operation, the **MARTIN® NCT™ Turbine Vibrators** may be a better choice.

FEATURES

Cost Effective Replacement

Designed to interchange with most brands of ball vibrators, providing a very cost-effective replacement. This type of industrial vibrator has been in use for over 50 years.

Versatile

Originally developed for use in foundries, these versatile units are now used to solve material-handling problems in many industries.

DIMENSIONS

MODEL	A	B	C	D	E	F	G	H	J	K	L	M
UCV-6	3 3/4	2 1/16	1 3/16	1 1/8	15/16	3	1/4	1/4	5/8	1/8		
UCV-13	5	2 19/32	1 5/16	1 13/32	1 7/16	4	5/16	3/8	3/4	1/8		
UCV-19	5	3 3/8	1 11/16	1 7/8	1 25/32	4	3/8	3/8	15/16	1/4		
UCV-25	6 1/2	3 7/8	2	2 1/8	2 11/64	5	7/16	1/2	1 1/4	1/4		
UCV-32	6 1/2	4 9/16	2 5/16	2 3/8	2 37/64	5	1/2	1/2	1 9/16	3/8		
UCV-38	7 3/4	5 3/16	2 5/8	2 7/8	2 29/32	6	9/16	5/8	1 7/8	3/8		
UCV-44	8 3/4	5 11/16	2 7/8	3 1/16	3 9/32	7	5/8	5/8	2 3/16	1/2		
BD-10	3 1/8	1 7/8	1 9/32	1 1/4	19/32	1 3/8	1/4	5/16	7/8	1/8		
BD-13	3 3/4	2 3/16	1 3/8	1 5/8	5/8	1 9/16	5/16	3/8	1 1/8	1/4		
BD-16	4 1/8	2 9/16	1 9/16	1 11/16	13/16	1 13/16	3/8	3/8	1 1/4	1/4		
BD-19	4 7/16	2 3/4	1 23/32	1 7/8	13/16	1 15/16	3/8	3/8	1 5/16	1/4		
BD-25	5 7/32	3 1/4	2	2 5/32	1 5/64	2 5/16	1/2	1/2	1 5/8	1/4		
CV-10	3 7/8	2	1 1/4	1 1/4	19/32	3	1/4	5/16	3/4	1/8	1 21/32	1 1/16
CV-19	5 1/8	3 1/8	1 23/32	1 3/4	13/16	4	3/8	3/8	1 1/4	1/4	2 7/16	1 3/4
CV-25	5 1/4	4 1/4	2 1/4	2 1/4	1 1/8	4	1/2	1/2	1 3/4	1/4	3 5/8	2 1/2
CV-35	5 1/4	4 1/4	2 1/4	2 1/4	1 1/8	4	1/2	1/2	1 3/4	1/4	3 5/8	2 1/2
DV-41	6 1/2	4 3/4	2 13/16	2 5/8	1 1/2	5 1/2	1/2	3/8	2 1/8	3/8	3 15/16	1 1/4
DV-51	6 1/2	5 9/32	3 9/32	3 1/8	1 1/2	5 1/2	1/2	3/8	2 1/8	3/8	4 3/16	1 3/4

inches (mm)

© Martin Vibration System and Solutions, Inc. All rights reserved.

MARTIN® Ball Vibrators

UCV

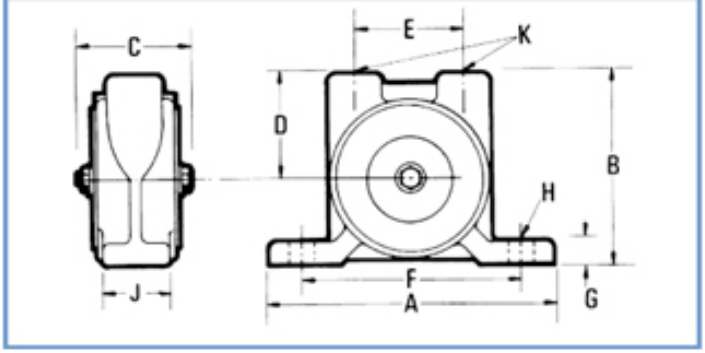

BD

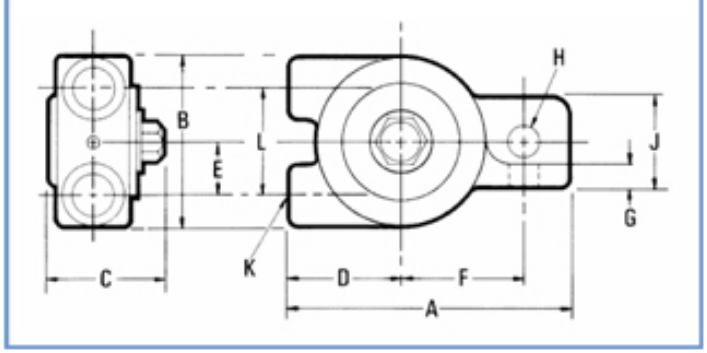

DV

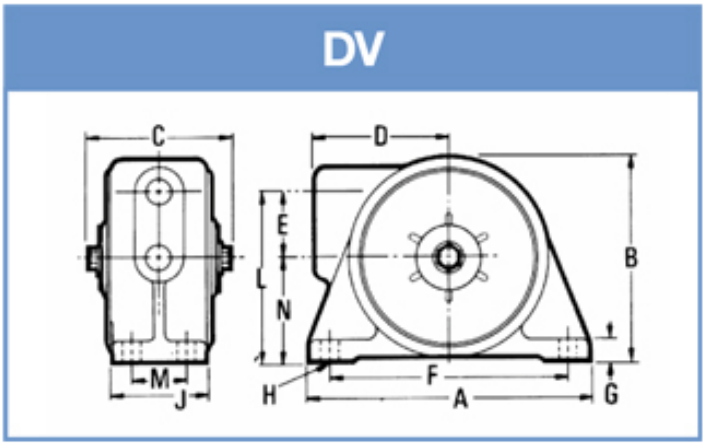

CV

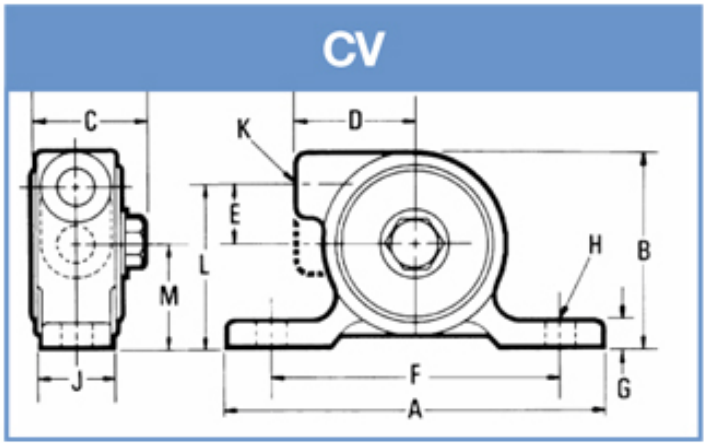

MARTIN® BALL VIBRATORS DIRECTLY INTERCHANGE WITH ALL THESE POPULAR MODELS.					
BD-10	E-10	BB-100	BS-10	HB-10	ABL-10
BD-13	E-13	BB-130	N/A	N/A	ABL-13
BD-16	E-16	BB-160	BS-16	N/A	N/A
BD-19	E-19	BB-190	BS-19	HB-19	ABL-19
BD-25	E-25	N/A	BS-25	N/A	N/A
UCV-6	U-6	BV-60	N/A	N/A	N/A
UCV-13	U-13	BV-130	YS-13	HU-13	N/A
UCV-19	U-19	BV-190	US-19	HU-19	N/A
UCV-25	U-25	BV-250	US-25	HU-25	N/A
UCV-32	U-32	BV-320	N/A	N/A	N/A
UCV-38	U-38	BV-380	US-38	N/A	N/A
UCV-44	U-44	N/A	US-44	N/A	N/A
CV-10	VBF-10	V-100	N/A	N/A	ABF-10
CV-19	VBF-19	V-190	CS-19	HC-19	ABF-19
CV-25	VBF-25	V-250	CS-25	HC-25	ABF-25
CV-35	VBF-35	V-320	CS-35	HC-35	ABF-35
DV-41	F-41	N/A	DS-41	HC-41	ABF-41
DV-51	F-51	N/A	DS-51	HC-51	ABF-51

© Martin Vibration System and Solutions, Inc. All rights reserved. • www.shake-it.com • sales@shake-it.com • 990 Degurse Ave Marine City, MI 48039

MARTIN® Ball Vibrators

PERFORMANCE

	FREQUENCY			FORCE LBS.			AIR CONSUMPTION (CFM)		
MODEL	20 PSI	40 PSI	60 PSI	20 PSI	40 PSI	60 PSI	20 PSI	40 PSI	60 PSI
UCV-6	17,000	22,000	25,000	8	14	18	2	3.5	4.5
UCV-13	12,000	15,000	19,000	33	51	82	2.5	5	7.5
UCV-19	10,500	14,000	16,000	115	205	270	4	7	11
UCV-25	7,500	9,700	11,000	175	275	380	6	10	13
UCV-32	5,100	6,500	7,500	185	285	390	6	11	17
UCV-38	4,200	5,500	6,200	240	410	560	7	14	20
UCV-44	3,900	5,100	6,000	300	530	710	9	15	21
inches (mm)									

	FREQUENCY			FORCE LBS.			AIR CONSUMPTION (CFM)		
MODEL	20 PSI	40 PSI	60 PSI	20 PSI	40 PSI	60 PSI	20 PSI	40 PSI	60 PSI
BD-10*	17,000	21,000	25,000	25	38	54	2	4	6
BD-13*	12,000	15,000	19,000	33	51	82	2.5	5	7.5
BD-16*	11,000	13,000	15,500	69	96	137	3	6	8
BD-19*	10,500	14,000	16,000	115	205	270	4	7	11
BD-25	7,500	9,700	11,000	175	275	380	6	10	13
inches (mm)									

	FREQUENCY			FORCE LBS.			AIR CONSUMPTION (CFM)		
MODEL	20 PSI	40 PSI	60 PSI	20 PSI	40 PSI	60 PSI	20 PSI	40 PSI	60 PSI
CV-10**	17,000	21,000	25,000	25	38	54	2	4	6
CV-19*	10,500	14,000	16,000	115	205	270	4	7	11
CV-25*	7,500	9,700	11,000	175	275	380	6	10	13
CV-35*	6,800	8,800	10,000	315	530	675	6	12	17
DV-41	3,200	4,300	4,900	255	460	600	9	16	24
DV-51	3,100	4,200	4,900	300	540	750	12	19	28
inches (mm)									

© Martin Vibration System and Solutions, Inc. All rights reserved.

VIBROTOR® High Frequency Roller Vibrators

Ask about quantity discounts!

VIBROTOR® High-Frequency, Industrial Roller Vibrators provide the highest force-to-weight ratio available. The high-speed/high-force provides the energy required for concrete and refractory compaction. Bins and hoppers that contain high bulk-density materials can easily be evacuated with these units.

FEATURES

Extremely High Force

Designed to handle the tough jobs, VIBROTOR™ Industrial Vibrators produce up to 14,500 pounds of force.

Low Maintenance

Rollers orbit around a center shaft with one vane, no bearings to fail. Simple, rugged design handles the rough jobs.

Permanent or Portable Mounts

Need portability? The CCR models are designed for quick change applications like precast concrete forms. DVR models bolt on, perfect for bins and hoppers or compaction tables.

Additional Specifications

- Air pressure range: 30 – 90 psi.
- Operating Temperature: Max. 250° F.
- Air Preparation: 5-micron filter, pressure regulator, lubricator.
- Force (maximum): 14,500 force-lbs.
- Options: Portable brackets, hose whips, air control equipment.

© Martin Vibration System and Solutions, Inc. All rights reserved.

VIBROTOR® High Frequency Roller Vibrators

DIMENSIONS

	A	B	C	D	E	F	G
DVR 700,1100,2600	8.66(220)	4.33(110)	6.89(175)	2.44(62)	7.09(180)	N/A	0.75(19)
DVR 5500,6500	10.0(254)	7.37(187)	6.5(165)	5.5(140)	7.87(200)	2.76(70)	0.75(19)
CCR-700,1100,2600	7.17(182)	5.51(140)	6.89(175)	3.54(90)	N/A	N/A	N/A
CCR-4400	7.17(182)	5.51(140)	6.89(175)	N/A	N/A	N/A	N/A
CCR-5500,6500,7800	9.63(245)	9.5(241)	6.75(171)	N/A	N/A	N/A	N/A
inches (mm)							

CRADLE LUG BRACKETS	A	B	C	D
NVH1	7.09(180)	4.13(105)	2.36(60)	3.94(100)
NVH4	9.45(240)	3.94(100)	2.76(70)	5.12(130)
inches (mm)				

CCR 700-7800

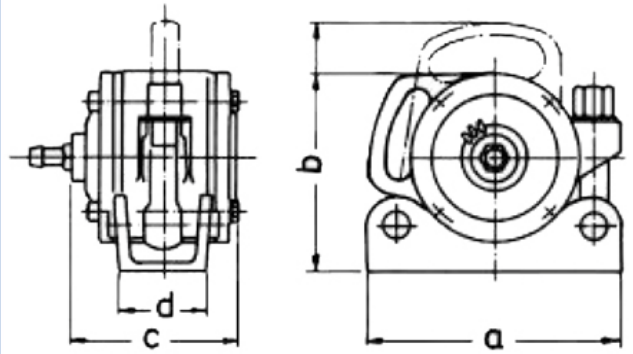

DVR 700-6500

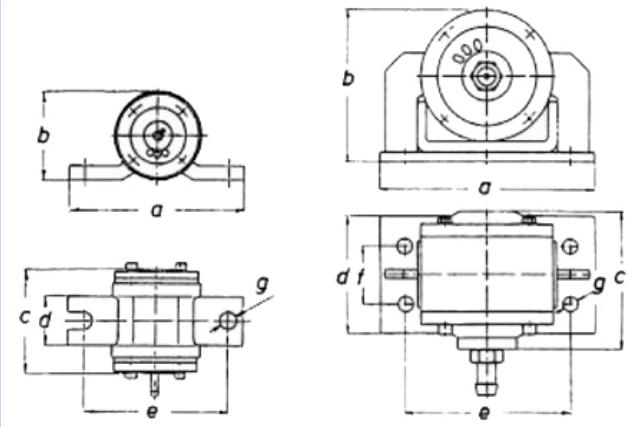

© Martin Vibration System and Solutions, Inc. All rights reserved.

VIBROTOR® High Frequency Roller Vibrators

PERFORMANCE

	60 PSI (4.1 BAR)			80 PSI (5.52 BAR)		
	FREQUENCY VPM	FORCE LBS. (N)	AIR CONSUMPTION CFM (L/MIN)	FREQUENCY VPM	FORCE LBS. (N)	AIR CONSUMPTION CFM (L/MIN)
DVR-700	12500	408(1815)	39(1104)	13500	476(2117)	42(1189)
DVR-1100	11500	724(3220)	49(1388)	13500	998(4439)	56(1586)
DVR-2600	11500	1164(5177)	57(1614)	12000	1267(5636)	66(1869)
DVR-5500	12500	5500(24464)	55(1558)	14000	7000(31136)	58(1643)
DVR-6500	10700	7600(33805)	44(1246)	12500	10400(46259)	50(1416)
CCR-700	12500	408(1815)	39(1104)	13500	476(2117)	42(1189)
CCR-1100	11500	724(3220)	49(1388)	13500	998(4439)	56(1586)
CCR-2600	11500	1164(5177)	57(1614)	12000	1267(5636)	66(1869)
CCR-4400	13500	2281(10146)	65(1841)	15000	2800(12454)	73(2067)
CCR-5500	12500	5596(24891)	55(1558)	14000	7000(31136)	58(1643)
CCR-6500	10700	7616(33876)	44(1246)	12500	10400(46259)	50(1416)
CCR-7800	10500	13300(59158)	60(1699)	11000	14500(64496)	72(2039)
inches (mm)						

PHOTOS

MARTIN® CCR 5500 VIBROTOR™ consolidating precast concrete.

VIBROTOR™ Vibrators used on concrete form.

© Martin Vibration System and Solutions, Inc. All rights reserved.

MARTIN® TAP & PAC™ Compacting Vibrators

The MARTIN® TAP & PAC™ Compacting Vibrators are ideal for settling materials in bags and containers. The speed and amplitude are independently adjustable, providing the exact force required to obtain desired content weights. The piston retracts after each cycle, eliminating the potential of interference with the containers.

MARTIN® TAP & PAC™ Compacting Vibrators are quiet, operate lubrication-free and are energy- efficient. Plus, they are wash-down safe and explosion-proof.

FEATURES

Quiet

Noise levels are 68 to 72 dBA, well below regulatory limits.

Explosion-Proof & Waterproof

No sparks or heat are generated by the pneumatically operated industrial vibrator. All units are totally sealed for wash-down safe operation.

Sanitary Design

Special coating systems on the vibrators shed material buildup and won't flake off.

Lubrication-Free Operation

MARTIN® TAP & PAC™ Compacting Vibrators are lubrication-free, eliminating the use of messy, maintenance-intensive lubricators. No oil mist is discharged into the atmosphere.

Exact Adjustment

The frequency and amplitude adjust independently. On and off is instantaneous. Tap when you want, as hard as you need, insuring fast, complete compaction. The piston retracts as not to interfere with moving containers.

Additional Specifications

- Air Pressure Range: 20-60 psi.
- Operating Temperature: 32°-120° F.
- Air Preparation: 5-micron filter, pressure regulator, 3-way control valve required.
- Force (maximum): 42 force-lbs.
- Warranty: 1-year when operated within recommendations.
- Noise levels: 68-71dBA.

© Martin Vibration System and Solutions, Inc. All rights reserved.

MARTIN® TAP & PAC™ Compacting Vibrators

DIMENSIONS

	A	B	C	D	E	F	G	H
NTK 18 AL KV	3.16(80)	1.3(33)	0.96(24)	0.8(20)	0.41(10)	1.5(38)	0.33(8)	0.78(20)
NTK 25 AL KV	2.95(75)	1.98(50)	1.58(40)	0.4(10)	0.6(15)	0.65(17)	1.5(38)	0.63(16)
inches (mm)								

NTK® 18AL KV

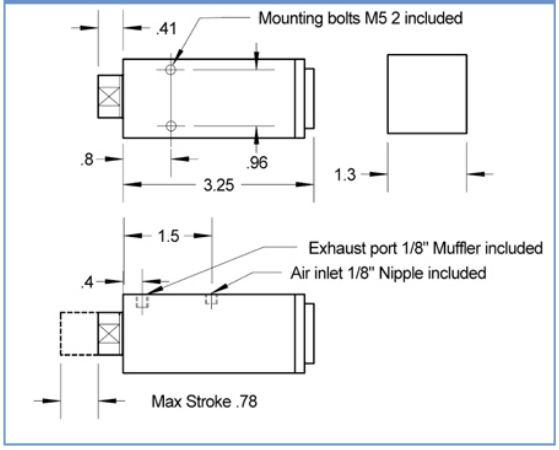

NTK® 25AL KV

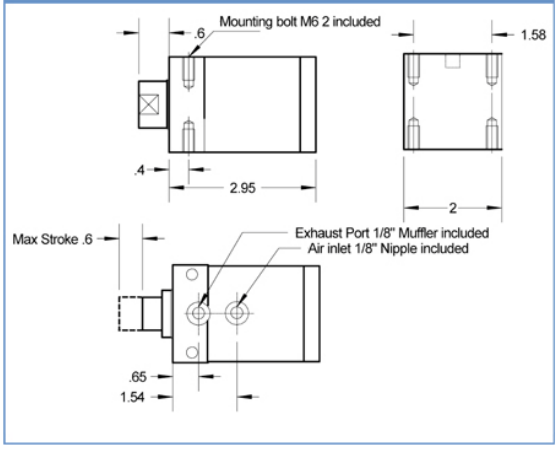

PERFORMANCE

	FREQUENCY		LINEAR FORCE LBS. (N)		WORKING MOMENT IN.-LB. (CMKG)		AIR CONSUMPTION CFM (L/MIN)	
	30 PSI (2 BAR)	60 PSI (4.1 BAR)	30 PSI (2 BAR)	60 PSI (4.1 BAR)	30 PSI (2 BAR)	60 PSI (4.1 BAR)	30 PSI (2 BAR)	60 PSI (4.1 BAR)
NTK 18AL KV	3000	3600	9(128)	19(257)	0.05(.06)	0.08(.09)	.6(16)	1.3(36)
NTK 25AL KV	2900	3800	23(312)	42(571)	0.18(.2)	0.2(.23)	1.5 (42)	3.2(90)
inches (mm)								

PHOTOS

MARTIN® TAP & PAC™
Compacting Vibrators

© Martin Vibration System and Solutions, Inc. All rights reserved.

MARTIN® WHIRLWIND™ High-Frequency Turbine Vibrator

The unique urethane-encapsulated turbine in Martin Engineering's MARTIN® WHIRLWIND™ High-Frequency Turbine Vibrator produces more power with less noise than any other high-force/high-frequency pneumatic turbine vibrator.

With an output of over 10,000 lb-f, depending on the application, the MARTIN® WHIRLWIND™ High-Frequency Turbine Vibrator doubles the force output of the most powerful competitive models. Units mount easily to cradle lug brackets or rail car wedge brackets, and operate quietly to meet OSHA noise requirements.

FEATURES

Moves More Material

Larger unbalance creates greater force output to move your material.

Saves Your Hearing

Testing shows noise level from 6 to 10 dB less than competitive models and within OSHA noise limits.

One-Worker Portability

Built-in handle provides easy portability for use in railcar unloading or on pre-cast forms.

Reduces Maintenance Costs

Long-life, high-speed sealed bearings need no lubrication.

Concrete Consolidation

Allows fast placement and high-strength consolidation, and provides excellent surface finish.

Railcar Unloading

High-frequency and high-force provide efficient unloading of compacted fine powders.

© Martin Vibration System and Solutions, Inc. All rights reserved.

MARTIN® WHIRLWIND™ High-Frequency Turbine Vibrator

DIMENSIONS

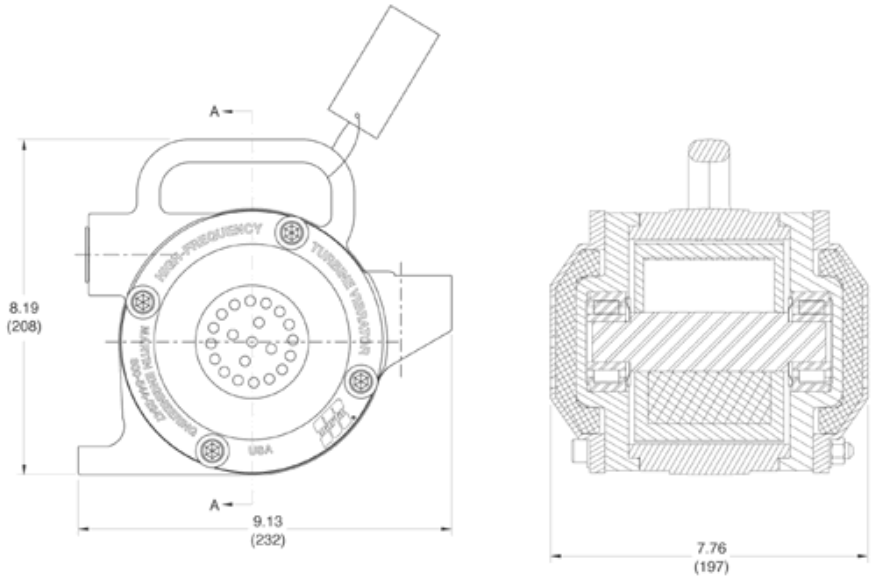

PERFORMANCE

WHIRLWIND PERFORMANCE DATA								
FREQUENCY			FORCE OUTPUT LB-F			AIR		
40 psi	*60 psi*	*80 psi*	*40 psi*	*60 psi*	*80 psi*	*40 psi*	*60 psi*	*80 psi*
6500	8400	9300	5158	8615	10,560	21	25	28

© Martin Vibration System and Solutions, Inc. All rights reserved.

E-Z™ Vibrator Mount Kits

Mount kits include mount bracket, fasteners and safety cable. Standard brackets are fabricated from cold-rolled carbon steel.

H-Mount

The “H” is the standard weld-on mount for bins and hoppers. All units are available in stainless steel and aluminum as well as standard cold-rolled steel.

Stand-Off High Temp & Adaptor Brackets

These brackets were developed with two applications in mind:

- Retrofit new vibrators to existing mounts without having to weld.
- High temperature applications where the vibrators must be located away from the heat source.

Martin® Glue Mount™ System

Can’t weld on a bracket? Try the glue mount. Try the unique MARTIN® GLUE-MOUNT™ System. Special brackets are designed to be used with our high-performance, two-component adhesive. Simply clean the surface, apply the glue to the bracket, and hold in place for 10 minutes. The bracket will be ready for use in 24 hours. This mount is best used on flat surfaces with the MARTIN® PKL™ Interval Impactors.

DIMENSIONS

MB-12	A	B	C	D	E	F	G
XHA-0.5,1.5,2T	12(305)	5.5(140)	6(152)	5(127)	0.25(6)	1.5(38)	0.25(6)
XHD-1.5,2.5T	12(305)	5.5(140)	6(152)	5(127)	0.25(6)	1.5(38)	0.25(6)
PKL 135,150	12(305)	5.5(140)	6(152)	5(127)	0.25(6)	1.5(38)	0.5(13)
MB-18							
XHA-0.5,1.5,2T	18(457)	5.5(140)	6(152)	5(127)	0.25(6)	1.5(38)	0.25(6)
XHD-1.5,2.5T	18(457)	5.5(140)	6(152)	5(127)	0.25(6)	1.5(38)	0.25(6)
NTS 350,75/01,50/01	18(457)	5.5(140)	6(152)	5(127)	0.25(6)	1.5(38)	0.5(13)
PKL 170,200,220	18(457)	5.5(140)	6(152)	5(127)	0.25(6)	1.5(38)	0.5(13)
NCT5,10,10I	18(457)	5.5(140)	6(152)	5(127)	0.25(6)	1.5(38)	0.5(13)
MB-24							
NCT15,29,29I	24(610)	6(152)	6(152)	5(127)	0.25(6)	1.5(38)	0.5(13)
MB-30							
XHA-3.5,6.5,8.5T	30(762)	7.25(184)	7.5(191)	6.5(165)	0.38(10)	1.5(38)	0.38(10)
XHD-5,6.5,8T	30(762)	7.25(184)	7.5(191)	6.5(165)	0.38(10)	1.5(38)	0.38(10)
NTS 50/01	30(762)	7(178)	7.5(191)	6.5(165)	0.25(6)	1.5(38)	0.5(13)
NCT55,108,108I	30(762)	7(178)	7.5(191)	6.5(165)	0.25(6)	1.5(38)	0.5(13)
MB-36							
XHA-11.5T	36(914)	8.75(222)	11(279)	8(203)	0.38(10)	1.5(38)	0.5(13)
XHD-12,16T	36(914)	8.75(222)	11(279)	8(203)	0.38(10)	1.5(38)	0.5(13)
NCT126,250,250I	36(914)	7.75(197)	9(229)	7(178)	0.38(10)	1.5(38)	0.5(13)
inches(mm)							

© Martin Vibration System and Solutions, Inc. All rights reserved.

E-Z™ Vibrator Mount Kits

STANDARD "H" TYPE VIBRATOR MOUNT BRACKET

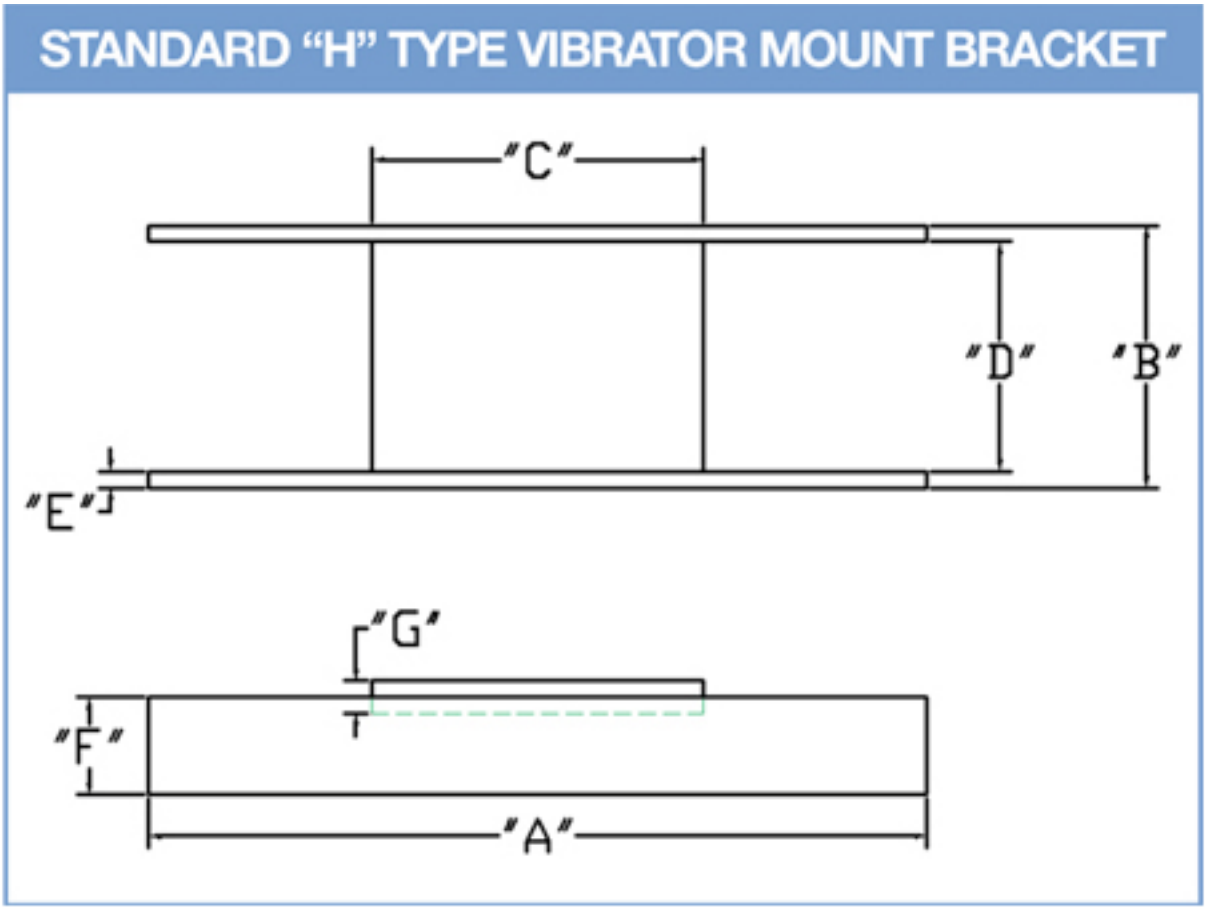

PHOTOS

Special brackets available for all applications.

Special mount used for electric vibrators on grizzly.

Two NCT 250 Turbine Vibrators mounted on large vessel.

PKL 135 Impactor mounted on cone.

© Martin Vibration System and Solutions, Inc. All rights reserved.

CDX Explosion Proof Electric Vibrators

MARTIN® CDX Series Vibrators provide powerful vibratory force to keep material moving. They are engineered for applications in hazardous environments, where explosive gases and dusts are present.

Each one comes with a 3 year warranty.

FEATURES

Approved for Hazardous Duty

Certified for North American use by CSA and UL for Class I, Division 1, Groups C and D and Class II, Division 1, Groups E, F, and G. Ductile iron models are ATEX Certified.

Full Range of Sizes

Line offers from 650 to 44,000 pounds of centrifugal force, including the smallest and largest explosion-proof vibrators on the market.

Efficient Design

High output force-to-weight ratio.

Larger Bearings

New design includes larger bearings for longer life.

Withstands Severe Temperatures

Rated for applications with continuous ambient temperature from -4° to 104° F (-20° to 40° C).

Designed to Meet Your Needs

Built for tough conditions. Invert Duty; Dual Voltage; Adjustable weights with cast weight covers. Vibrators available in any electrical rating.

Easy Maintenance

External grease fittings make lubrication easy; smallest sizes are lubricated for life.

Superior Customer Service

Faster delivery from domestic stock. Local service and technical support.

Unmatched 3-Year Warranty

MARTIN® Electric Vibrators lead the industry with a 3-year warranty.

© Martin Vibration System and Solutions, Inc. All rights reserved.

CD™ Series Electric Vibrators

MARTIN® CD Series Vibrators are designed and built to withstand the rigors of the industrial environment and operate in a continuous duty cycle.

This series is so tough we guarantee them for 3 years even when operated at 100% amplitude setting, in a 24/7 operating environment.

Each vibrator is manufactured using the latest automated techniques, insuring exact bearing and seal fits. Add vacuum impregnated windings and you have a high performance vibrator second to none.

Each one comes with a 3 year warranty.

FEATURES

Quiet

Operates at 60 - 70 dBA, the same as a standard electric motor. Air driven piston vibrators operate as high as 120 dBA.

3-Year Warranty

All MARTIN® CD-Series Electric Vibrators carry a full 3-year warranty when operated within factory recommendations.

Built to Last

Vacuum impregnated windings, o-ring seals, and machined surfaces provide an IP 66 rating to protect against the entry of dirt or water, virtually eliminating the possibility of failure.

Additional Specifications

- Operating Temperature: 3 Phase: -22° - 104° F, 1 Phase: 32° - 104° F.
- Adjustable Output: Weights can be positioned for precise control of force.
- Force (maximum): 20,000 force-lbs.
- Included: 115 Volt Single Phase units include starting capacitor and cord set.

© Martin Vibration System and Solutions, Inc. All rights reserved.

CD™ Series Electric Vibrators

PERFORMANCE & DIMENSIONS

CD™ SERIES ELECTRIC VIBRATORS PERFORMANCE DATA AND DIMENSIONS

3600 RPM — **Dimensions (in.)**

Model Number	Max Force Lbs.	Amp Draw	A	B	C	D	E	F	G
115 V. 1-Ph. 60 Hz. starting capacitors & 20' of cable included									
CDS36-380	385	1.52	8.31	6.02	4.92	2.44-2.91	4.17	0.95	0.35
CDS36-480	482	1.52	9.25	6.02	4.92	2.44-2.91	4.17	0.95	0.35
CDS36-660	653	2.4	10.04	7.05	5.98	3.54	4.92	1.1	0.51
CDS36-1050	1034	4.5	11.34	7.99	6.57	4.13	5.51	1.18	0.51
CDS36-1660	1660	7	15	8.27	8.07	4.72	6.69	1.77	0.67
230/460 V. 3-Ph. 60 Hz.									
CD36-380	385	0.60 / 0.30	8.31	6.02	4.92	2.44-2.84	4.17	0.95	0.35
CD36-480	482	0.60 / 0.30	9.25	6.02	4.92	2.44-2.84	4.17	0.95	0.35
CD36-660	653	1.0 / 0.50	10.04	7.05	5.98	3.54	4.92	1.1	0.51
CD36-1050	1034	1.60 / 0.80	11.34	7.99	6.57	4.13	5.51	1.18	0.51
CD36-1660	1660	2.0 / 1.0	12.09	8.27	8.07	4.72	6.69	1.77	0.67
CD36-2900	2923	3.8 / 1.9	14.21	8.37	8.46	3.94	7.09	1.85	0.67
CD36-3280	3267	4.0 / 2.0	16.93	9.06	9.06	5.51	7.48	1.93	0.67
CD36-4100	4083	6.0 / 3.0	18.31	9.06	9.06	5.51	7.48	1.93	0.67
CD36-4910	4901	6.0 / 3.0	18.31	9.06	9.06	5.51	7.48	1.93	0.67

1800 RPM — **Dimensions (in.)**

Model Number	Max ForceLbs	Amp Draw	A	B	C	D	E	F	G
115 V. 1-Ph. 60 Hz. starting capacitors & 20' of cable included									
CDS18-100	97	0.2	8.31	6.02	4.92	2.44-2.84	4.17	0.95	0.35
CDS18-180	169	0.2	9.25	6.02	4.92	2.44-2.84	4.13	0.94	0.35
CDS18-480	471	.04	11.83	7.05	5.98	3.54	4.92	1.1	0.51
CDS18-920	904	0.6	13.54	7.99	6.57	4.13	5.51	1.18	0.51
230/460 V 3-Ph 60 HZ									
CD18-100	97	0.40 / 0.20	8.31	6.02	4.92	2.44-2.84	4.17	0.95	0.35
CD18-180	169	0.40 / 0.20	9.25	6.02	4.92	2.44-2.84	4.13	0.94	0.35
CD18-480	471	0.80 / 0.40	11.83	7.05	5.98	3.54	4.92	1.1	0.51
CD18-920	904	1.20 / 0.60	13.54	7.99	6.57	4.13	5.51	1.18	0.51
CD18-1310	1302	1.20 / 0.60	15.2	7.99	6.57	4.13	5.51	1.18	0.51
CD18-1670	16732	2.0 / 1.0	15	8.27	8.07	4.72	6.69	1.77	0.67

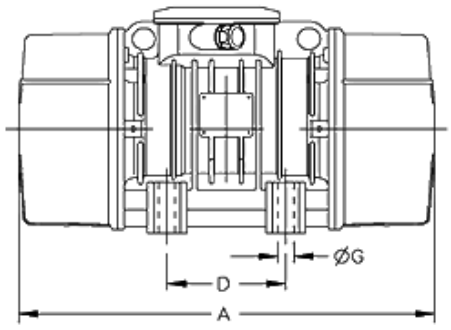

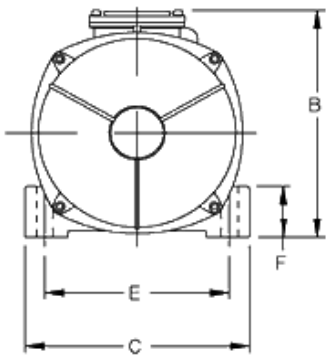

© Martin Vibration System and Solutions, Inc. All rights reserved.

XHD™ Extra Heavy Duty Electric Vibrators

An economical solution for material-flow problems in bins and hoppers. No more pounding on bins and hoppers with sledge hammers. No more production delays because of clogged storage vessels.

No more clanging of noisy, air driven piston vibrators. MARTIN® XHD Hopper Vibrators are designed and built to withstand the rigors of the industrial environment. So tough we guarantee them for 3 years.

High-Performance Vibrators

MARTIN® Electric Vibrators are designed and built to withstand the rigors of the industrial environment and operate in a continuous-duty cycle. This series is so tough we guarantee them for 3 years even when operated at 100% amplitude setting, in a 24/7 operating environment. Each vibrator is manufactured using the latest automated techniques, ensuring exact bearing and seal fits. Add vacuum-impregnated windings and you have a high-performance vibrator second to none. **Available in single-phase and 3-phase models from 200-20,000 force pounds. 900, 1200, 1800 and 3600 rpms.** **Note:** Vibrators sized for material 50-90 lbs. per cu./ft. with 5% or less moisture content. Contact factory for other material.

FEATURES

Quiet

Operates at 60 - 70 dBA, the same as a standard electric motor. Air driven piston vibrators operate as high as 120 dBA.

Energy-Efficient

Higher force-to-energy consumption ratio than any other vibrator in its class.

Built to Last

Vacuum impregnated windings, o-ring seals, and machined surfaces provide an IP 66 rating to protect against the entry of dirt or water, virtually eliminating the possibility of failure.

Other Equipment & Services

- Mounting brackets, timers, and controls
- Factory-trained installation
- All single phase units contain overload, starting capacitor, switch box and cord standard. All units are available without these components at a reduced price.

Additional Specifications

- Operating Temperature: 3 Phase: -22° - 104° F, 1 Phase: 32° - 104° F.
- Adjustable Output: Weights can be positioned for precise control of force
- Force (maximum): 3500 force-lbs.
- Warranty: 3-years when operated within recommendations
- Included: 115 Volt Single Phase units include switchbox, overload protection, capacitor and cord.
- Totally water tight! Corrosive resistant!

© Martin Vibration System and Solutions, Inc. All rights reserved.

XHD™ Extra Heavy Duty Electric Vibrators

DIMENSIONS

XHD SERIES 3600 RPM	A	B	C	D	E	F
A1.5T & C1.5T	8.15(207)	5.63(143)	6.50(165)	2.44(62)	4.17(106)	0.98(25)
A2T & C2.5T	8.78(223)	5.63(143)	6.50(165)	2.44(62)	4.17(106)	0.98(25)
A5T & C5T	9.72(247)	6.79(173)	6.50(165)	3.54(90)	4.92(125)	0.98(25)
A8T & C8T	11.14(283)	7.56(192)	8.54(217)	4.13(105)	5.51(140)	1.18(30)
A12T & C12T	12.13(308)	8.35(212)	9.37(238)	3.93(100)	7.08(180)	1.69(43)
C16T	12.76(324)	8.50(216)	8.62(219)	3.94(100)	7.09(180)	1.38(35)
C24T	16.85(428)	9.25(235)	9.13(232)	5.51(140)	7.48(190)	0.98(25)
C36T	18.23(463)	9.25(235)	9.13(232)	5.51(140)	7.48(190)	0.98(25)
	G	H	I	L	M	N
A1.5T & C1.5T	0.35(9)	3.39(86)	1.73(44)	3.94(100)	6.14(156)	4.84(123)
A2T & C2.5T	0.35(9)	3.39(86)	2.05(52)	3.94(100)	6.14(156)	4.84(123)
A5T & C5T	0.51(13)	4.06(103)	1.97(50)	4.88(124)	6.14(156)	5.75(146)
A8T & C8T	0.51(13)	4.45(113)	2.46(63)	5.63(143)	5.39(137)	6.61(168)
A12T & C12T	0.67(17)	3.68(94)	2.48(63)	6.61(168)	6.42(163)	7.60(193)
C16T	0.67(17)	3.68(94)	2.99(76)	6.61(168)	6.02(153)	7.60(193)
C24T	0.67(17)	4.09(104)	3.41(87)	7.40(188)	9.76(248)	8.82(224)
C36T	0.67(17)	4.09(104)	4.09(104)	7.40(188)	9.76(248)	8.82(224)
inches(mm)	**"A" Series = 115 VAC 1ph**			**"C" Series = 220/440 VAC 3ph**		

XHD

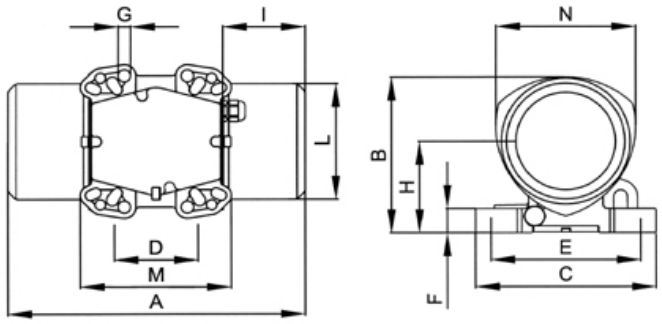

XHD

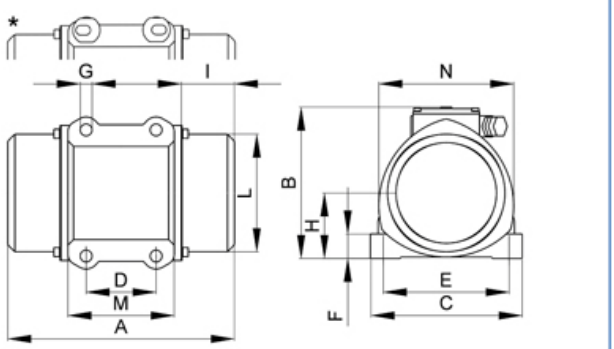

© Martin Vibration System and Solutions, Inc. All rights reserved.

XHD™ Extra Heavy Duty Electric Vibrators

PERFORMANCE

	UNBALANCE IN/LBS (CMKG)	CENTRIFUGAL FORCE LBS.(N)	POWER INPUT (KW)	MAX AMP DRAW	
				110 VAC	230/460
XHD-A1.5T, XHD-C1.5T	1.39(1.6)	384(1706)	0.165	1.52	0.6/0.3
XHD-A2T, XHD-C2.5T	2.43(2.8)	447(1990)	0.18	1.52	0.6/0.3
XHD-A5T, XHD-C5T	3.99(4.6)	735(3269)	0.26	2.4	1.0/0.5
XHD-A8T, XHD-C8T	7.29(8.4)	1342(5970)	0.45	4.5	1.6/0.8
XHD-A12T, XHD-C12T	9.11(10.5)	1678(7462)	0.69	7	2.0/1.0
XHD-C16T	14.32(16.5)	2636(11727)	1	N/A	3.8/1.9
XHD-C24T	17.70(20.4)	3260(14499)	1.9	N/A	6.0/3.0
XHD-C36T	22.21(25.6)	4090(18195)	2.2	N/A	6.0/3.0
inches(mm)					

PHOTOS

XHD™ Extra Heavy Duty Electric Vibrators

© Martin Vibration System and Solutions, Inc. All rights reserved.

XHA™ Extra Hi-Amplitude Electric Vibrator

An economical solution for material-flow problems in bins & hoppers containing lumpy, sticky, or light fluffy materials. The high-amplitude, low-frequency (1800 rpm) generated is ideal for compacting and screening applications.

MARTIN® XHA 1800 rpm Electric vibrators are the perfect choice for compaction table drives and other amplitude-sensitive applications. We also fabricate custom compaction table assemblies.

MARTIN® XHA High Amplitude Electric Vibrators are designed and built to withstand the rigors of the industrial environment; so tough we guarantee them for 3 years. **Available in single-phase and 3-phase models from 200-20,000 force pounds. 900, 1200, 1800 and 3600 rpms.** **Note:** Vibrators sized for material 50-90 lbs. per cu./ft. with 5% or less moisture content. Contact factory for other material.

FEATURES

Quiet

Operates at 60 - 70 dBA, the same as a standard electric motor. Air driven piston vibrators operate as high as 120 dBA.

Sanitary Design

Epoxy coating and stainless steel end caps makes the new MARTIN® XHD Series perfect for sanitary applications.

Built to Last

Vacuum impregnated windings, o-ring seals, and machined surfaces provide an IP 66 rating to protect against the entry of dirt or water, virtually eliminating the possibility of failure.

Other Equipment & Services

Mounting brackets, timers, and controls. All single phase units contain overload, starting capacitor, switch box and cord standard. All units are available without these components at a reduced price.

Additional Specifications

- Operating Temperature: 3 Phase: -22° - 104° F, 1 Phase: 32° - 104° F.
- Adjustable Output: Weights can be positioned for precise control of force.
- Force (maximum): 2300 force-lbs.
- Warranty: 3-years when operated within recommendations.
- Included: 115 Volt Single Phase units include switchbox, overload protection, capacitor and cord.

© Martin Vibration System and Solutions, Inc. All rights reserved.

XHA™ Extra Hi-Amplitude Electric Vibrator

DIMENSIONS

XHA SERIES						
1800 RPM	A	B	C	D	E	F
A0.5T C0.5T	8.15(207)	5.63(143)	6.50(165)	2.44(62)	4.17(106)	0.98(25)
A1.5T C1.5T	9.57(243)	5.63(143)	6.50(165)	2.44(62)	4.17(106)	0.98(25)
A3.5T C3.5T	12.09(307)	6.79(173)	6.50(165)	3.54(90)	4.92(125)	0.98(25)
A6.5T C6.5T	13.98(355)	7.56(192)	8.54(217)	4.13(105)	5.51(140)	1.18(30)
A8.5T C8.5T	15.39(391)	7.56(192)	8.54(217)	4.13(105)	5.51(140)	1.18(30)
C11.5T	15.43(392)	8.35(212)	9.37(238)	3.93(100)	7.08(180)	1.69(43)
	G	H	I	L	M	N
A0.5T C0.5T	0.35(9)	3.39(86)	1.73(44)	3.94(100)	6.14(156)	4.84(123)
A1.5T C1.5T	0.35(9)	3.39(86)	2.44(62)	3.94(100)	6.14(156)	4.84(123)
A3.5T C3.5T	0.51(13)	4.06(103)	3.15(80)	4.88(124)	6.14(156)	5.75(146)
A6.5T C6.5T	0.51(13)	4.45(113)	3.88(99)	5.63(143)	5.39(137)	6.61(168)
A8.5T C8.5T	0.51(13)	4.45(113)	4.59(117)	5.63(143)	5.39(137)	6.61(168)
C11.5T	0.67(17)	3.68(94)	4.13(105)	6.61(168)	6.42(163)	7.60(193)
inches(mm)	**"A" Series = 115 VAC 1ph**		**"C" Series = 220/440 VAC 3ph**			

XHA

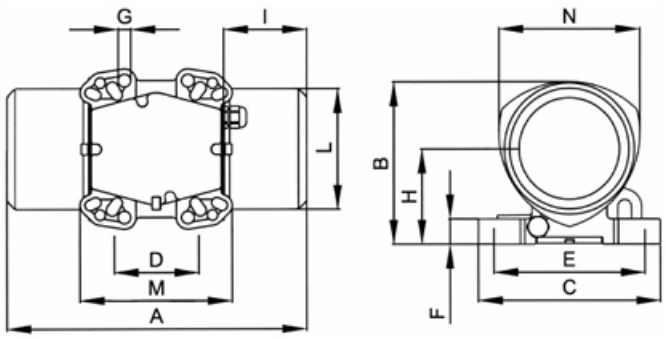

XHA

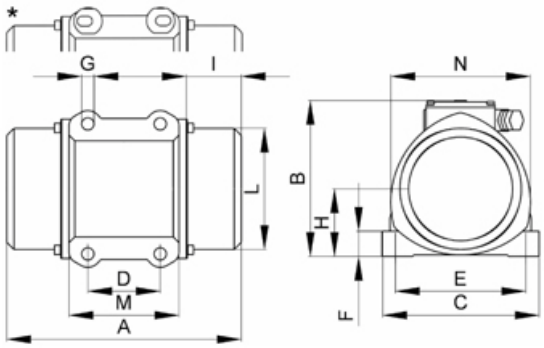

© Martin Vibration System and Solutions, Inc. All rights reserved.

XHA™ Extra Hi-Amplitude Electric Vibrator

PERFORMANCE

	UNBALANCE	CENTRIFUGAL FORCE	POWER INPUT	MAX AMP DRAW	
	IN/LBS (CMKG)	FORCE LBS (N)	(KW)	110 VAC	230/460
XHA-A0.5T XHA-C0.5T	2.2(2.4)	95.8(426)	0.095	0.20	0.40/0.20
XHA-A1.5T XHA-C1.5T	3.8(4.2)	167(747)	0.095	0.20	0.40/0.20
XHA-A3.5T XHA-C3.5T	10.6(11.76)	470(2090)	0.17	0.40	0.80/0.40
XHA-A6.5T XHA-C6.5T	20.4(22.66)	905(4027)	0.35	0.60	1.20/0.60
XHA-A8.5T XHA-C8.5T	29.4(32.64)	1304(5800)	0.35	0.60	1.20/0.60
XHA-C11.5T	37.7(41.89)	1674(7444)	0.665	0.98	2.0/1.0
inches(mm)					

PHOTOS

MARTIN® XHA Series
Extra Hi-Amplitude
Electric Vibrator

© Martin Vibration System and Solutions, Inc. All rights reserved.

Micro™ Series Electric Vibrators

MARTIN® MICRO™ Rotary Electric Vibrators have all the rugged design characteristics required of a continuous-duty vibrator, wrapped in a small package. They are ideal for small feeding, screening, calibrating, separating and compacting applications that are found in food, chemical and pharmaceutical facilities.

NEW! NEA MICRO SERIES

Available in three compact sizes. Great for packaging & bottling systems!

FEATURES

No Lubrication Required

MARTIN® MICRO™ Electric Vibrators are built with permanently-lubricated bearings. No maintenance is required.

Quiet

Noise levels are than 60 dBA, well below regulatory limits.

Energy-Efficient

The operating costs of electric vibrators is a fraction of the cost of pneumatic vibrators.

Sanitary

Sanitary Design, Epoxy Coating & Stainless Steel end caps.

Additional Specifications

- Electrical Specifications: 115-V, 60-Hz - Standard, other voltages available
- Operating Temperature: 32° - 110°F.
- Force (maximum): 60 force-lbs.
- Included: M-16/NEA 504–3’ cord set, M-60–6’ cord with switch box, NEA 5020–20’ cord, inline capacitor.
- 1-Year Warranty
- Noise Levels: 60 dBA

© Martin Vibration System and Solutions, Inc. All rights reserved.

Micro™ Series Electric Vibrators

DIMENSIONS

	A	B	C	D	E	F
NEA 504	4.45(113)	2.46(63)	3.54(90)	1.57(40)	2.95(75)	0.35(9)
NEA 5020	6.06(154)	2.93(75)	4.33(110)	2.36(60)	3.35(85)	0.39(10)
NEA 5050	6.65(169)	2.93(75)	4.33(110)	2.36(60)	3.35(85)	0.39(10)
	G	**H**	**I**	**J**	**K**	**L**
NEA 504	0.22(6)	1.26(32)	0.79(20)	2.23(57)	2.78(71)	2.95(75)
NEA 5020	0.26(7)	1.50(38)	1.08(28)	2.70(69)	3.82(97)	3.35(85)
NEA 5050	0.26(7)	1.50(38)	1.38(35)	2.70(69)	3.82(97)	3.90(99)
inches(mm)						

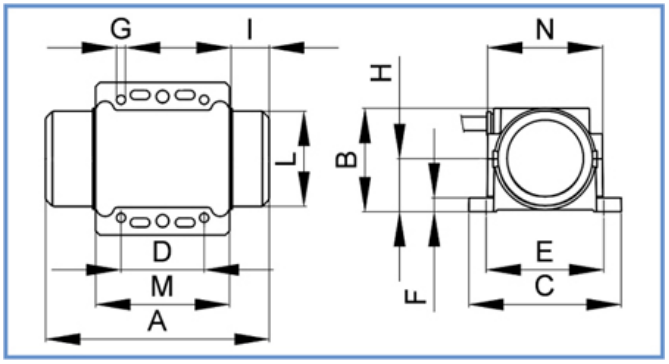

PERFORMANCE

	UNBALANCE IN/LBS (CMKG)	CENTRIFUGAL FORCE LBS.(N)	POWER INPUT (KW)	MAX AMP DRAW
				110 VAC
NEA 504	.07(.08)	13(57)	0.024	0.3
NEA 5020	.34(.39)	62(277)	0.035	0.23
NEA 5050	.57(.66)	105(469)	0.045	0.3
inches(mm)				

© Martin Vibration System and Solutions, Inc. All rights reserved.

Electric Vibrator Mount Kits

Vibrator	Mount Kit
MICRO SERIES	XHD-MB12
XHD-A1T XHD-C1T	
CDS36-210 CD36-210	XHD-MB18
CDS18-70 CD18-70	
XHD-A1.5T XHD-C1.5T	
XHA-A0.5T XHA -C0.5T	
CDS36-390 CD36-390	XHD-MB18-2
CDS18-170 CD18-170	
XHD-A2T XHD-C2.5T	
XHA-A1.5T XHA-C1.5T	
CDS36-650 CD36-650	XHD-MB30
CDS18-470 CD18-470	
XHD-A5T XHD-C5T	
XHA-A3.5T XHA-C3.5T	
CDS36-1040 CD36-1040	XHD-MB30-8
CDS18-910 CD18-910	
CDS18-1300 CD18-1300	
XHD-A8T XHD-C8T	
XHA-A6.5T XHA-C6.5T	
XHA-A8.5T XHA-C8.5T	
CDS36-1660 CD36-1660	XHD-MB36
CD18-1670 CD18-2150	
XHD-A12T XHD-C12T	
XHA-C11.5T	
CD36-2900	XHD-MB36-16
XHD-C16T	

© Martin Vibration System and Solutions, Inc. All rights reserved.

Electric Vibrator Mount Kits

DIMENSIONS

VIBRATOR MOUNT BRACKET DIMENSIONS							
MB-12	A	B	C	D	E	F	G
XHA-0.5,1.5	12(305)	5.5(140)	6(152)	5(127)	0.25(6)	1.5(38)	0.25(6)
XHD-1.5	12(305)	5.5(140)	6(152)	5(127)	0.25(6)	1.5(38)	0.25(6)
PKL 135,150	12(305)	5.5(140)	6(152)	5(127)	0.25(6)	1.5(38)	0.38(10)
MB-18							
XHA-0.5,1.5,2T	18(457)	5.5(140)	6(152)	5(127)	0.25(6)	1.5(38)	0.38(10)
XHD-1.5,2.5T	18(457)	5.5(140)	6(152)	5(127)	0.25(6)	1.5(38)	0.38(10)
NTS 350,75/01,50/01	18(457)	5.5(140)	6(152)	5(127)	0.25(6)	1.5(38)	0.38(10)
PKL 170,200,220	18(457)	5.5(140)	6(152)	5(127)	0.25(6)	1.5(38)	0.38(10)
NCT-5,10,10I	18(457)	5.5(140)	6(152)	5(127)	0.25(6)	1.5(38)	0.38(10)
MB-24							
NCT-15,29,29I	24(610)	6(152)	6(152)	5(127)	0.25(6)	1.5(38)	0.38(10)
MB-30							
XHA-3.5,6.5,8.5T	30(762)	7.25(184)	7.5(191)	6.5(165)	0.38(10)	1.5(38)	0.38(10)
XHD-5,6.5,8T	30(762)	7.25(184)	7.5(191)	6.5(165)	0.38(10)	1.5(38)	0.38(10)
NTS 54/02,50/04	30(762)	7(178)	7.5(191)	6.5(165)	0.25(6)	1.5(38)	0.38(10)
NCT-55,108,108I	30(762)	7(178)	7.5(191)	6.5(165)	0.25(6)	1.5(38)	0.38(10)
MB-36							
XHA-11.5T	36(914)	8.75(222)	11(279)	8(203)	0.38(10)	1.5(38)	0.5(13)
XHD-12,16T	36(914)	8.75(222)	11(279)	8(203)	0.38(10)	1.5(38)	0.5(13)
NCT-126,250,250I	36(914)	8.75(222)	11(279)	8(203)	0.38(10)	1.5(38)	0.5(13)
inches(mm)							

STANDARD "H" TYPE VIBRATOR MOUNT BRACKET

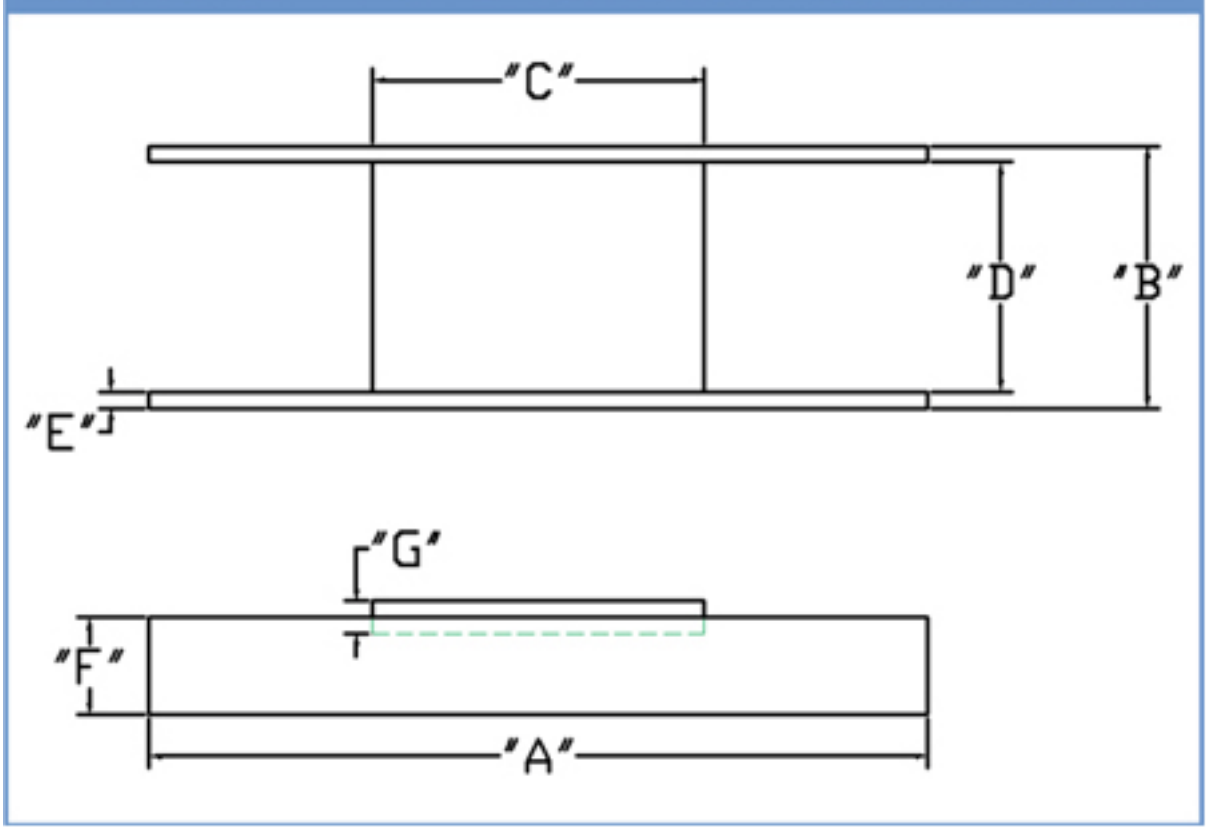

© Martin Vibration System and Solutions, Inc. All rights reserved.

MARTIN® E-Z™ Weigh Systems Feeder/Hopper System

Looking for a cost effective loss-in-weight or volumetric feeding system?

The MARTIN® E-Z™ Weigh-Feeder/Hopper System is your answer. We have incorporated the popular MARTIN® E-Z™ Weigh-Feeder with a Hopper/Base Assembly to provide a stand alone feeding system. When placed on a bench scale base, the MARTIN® E-Z™ Weigh-Feeder can be controlled to provide a constant feed rate or an exact amount for batch processes.

- Waterproof!
- Explosion-proof!
- Fast, accurate feed rates!
- Electro-polished stainless steel construction!

Custom Hopper/Feeder Sizes & Configurations Available

Problem: A chemical supplier was experiencing high labor costs when filling containers by hand. The operator positioned 1 & 1.5-pound containers on a scale and scooped material into the containers, by hand, until the weight was reached.

Solution: A special MARTIN® E-Z™ Weigh System was developed. The operator now places the containers on the scale and pushes a foot switch. The scale logic tares the scale to zero and then activates the MARTIN® E-Z™ Feeder. When the scale is satisfied the feeder is stopped and the operator removes the filled container.

Result: Labor costs are reduced by 50%, spillage is greatly reduced as is the overfill of the containers.

FEATURES

Clean, Sanitary Design

Standard, all electro-polished stainless steel fabrication, powered by a corrosion-proof, coated drive. Ideal for food, chemical & pharmaceutical applications.

Explosion-Proof

No sparks or heat are generated by the pneumatic drive system. Totally sealed for safe wash-down.

Quiet & Energy-Efficient

Drive system operates at less than 65 dBA.

Uses 0.18 – 3.14 cfm.

Designed To Work With A Wide Variety Of Electronics

MARTIN® E-Z™ Weigh systems are modular. They are designed to be used with most popular electronic scales.

© Martin Vibration System and Solutions, Inc. All rights reserved.

MARTIN® E-Z™ Weigh Systems Feeder/Hopper System

Exact Adjustment

Speed and stroke are independently adjusted, providing exact control.

3-Year Guarantee

Drive unit is covered by a full 3-year guarantee.

DIMENSIONS

MODEL	A	B	C	D	E	F (HOPPER CAPACITY)	WEIGHT
EZFH-9	10	24	18	28	14	0.9	33 lbs.
EZFH-1.4	10	24	18	34	14	1.4	37 lbs.
EZFH-2	10	24	24	31	20	2	58 lbs.
EZFH-2.8	10	24	24	36	20	2.8	65 lbs.
Choose Flat or V Tray. Enclosed systems available. Call for optional control packages.							
inches (mm)							

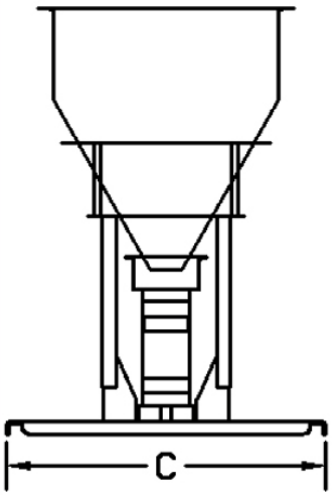

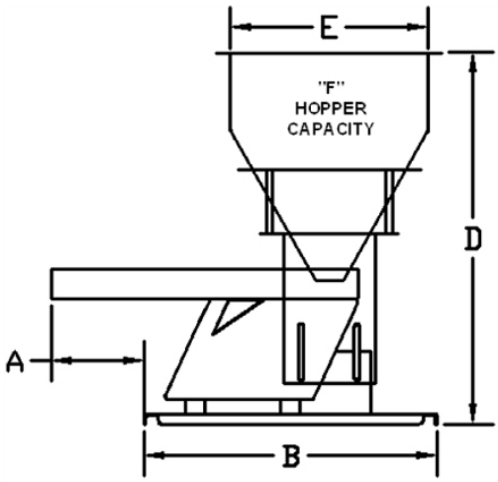

PHOTOS

MARTIN® E-Z™ Weigh-Feeder/Hopper System

MARTIN® E-Z™ Weigh-Feeder/Hopper System

MARTIN® E-Z™ Weigh-Feeder/Hopper System

© Martin Vibration System and Solutions, Inc. All rights reserved.

MARTIN® E-Z™ Dry Ingredient Spreader

The NEW E-Z™ Dry Ingredient Spreader applies dry ingredients, including seasonings, spices, chopped nuts and frozen foods to conveyed products accurately. Mounted directly above conveyors, product is metered directly on to baked goods or frozen entrees.

Using the same proven technology as the MARTIN® E-Z™ FEEDER SYSTEM, consistent feed rates are guaranteed. The powerful, energy efficient, pneumatic drive delivers what you need, where you need it and when you need it. The instant on, instant off operation insures exact metering with no wasted ingredients.

All E-Z™ Dry Topping Spreaders are fabricated from 304 S.S. and then electro polished, providing a sanitary design that is a snap to clean.

FEATURES

Clean, Sanitary Design

Standard, all electro-polished 304 SS fabrication powered by a corrosion-proof, pneumatic drive. Cleaning and maintenance is simple compared to other dry topping machines.

Fast, Accurate Dispensing

Instant on, instant off.

Versatile Design

Installs directly above any conveyor from 6 to 36” wide. Please consult factory for sizes over 36.”

DIMENSIONS

A*	B*	C	D	E
Custom widths		15.5(393)	14.5(368)	1.75(44)
inches (mm)	*dependent on conveyor width			

© Martin Vibration System and Solutions, Inc. All rights reserved.

MARTIN® E-Z™ Dry Ingredient Spreader

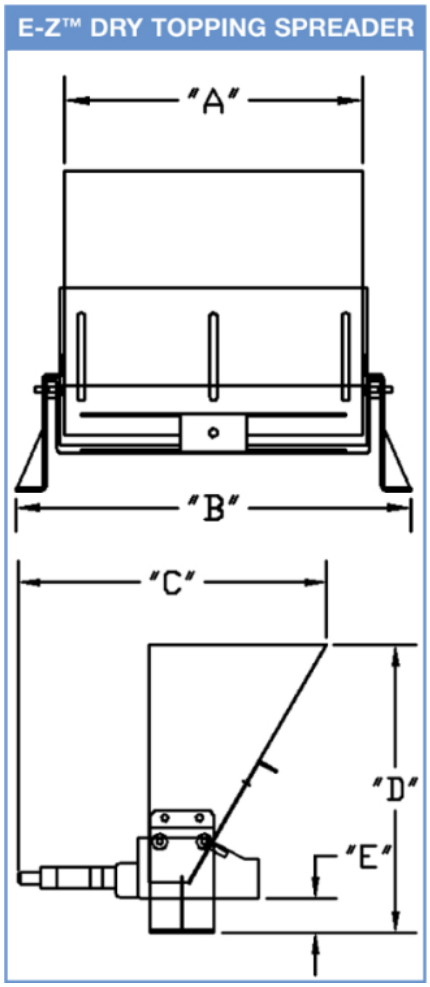

PHOTOS

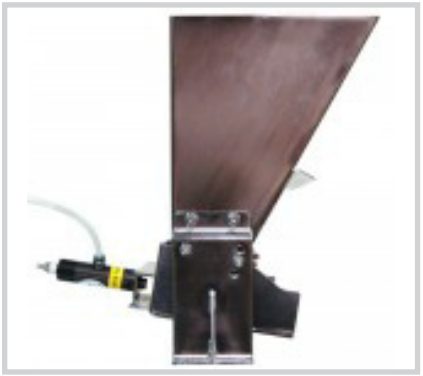

MARTIN® E-Z™ Dry Ingredient Spreader

MARTIN® E-Z™ Dry Ingredient Spreader

© Martin Vibration System and Solutions, Inc. All rights reserved.

MARTIN® E-Z™ Auto Scoop Filling System

Tired of scooping or hand filling?

Concerned about repetitive motion injuries? Want to increase your number of containers per hour? If so, the MARTIN® E-Z Auto Scoop Filling System is for you! Place your container on the scale and step on the foot switch. In seconds, your product will be dispensed fast and accurate.

Custom Hopper/Feeder Sizes & Configurations Available

Problem: A chemical supplier was experiencing high labor costs when filling containers by hand. The operator positioned 1 & 1.5-pound containers on a scale and scooped material into the containers, by hand, until the weight was reached.

Solution: A special MARTIN® E-Z™ Weigh System was developed. The operator now places the containers on the scale and pushes a foot switch. The scale logic tares the scale to zero and then activates the MARTIN® E-Z™ Feeder. When the scale is satisfied the feeder is stopped and the operator removes the filled container.

Result: Labor costs are reduced by 50%, spillage is greatly reduced as is the overfill of the containers.

FEATURES

Developed Specifically For Short Runs

Gourmet food manufacturers, re-packers, coffee and spice sellers, chemical packagers and other packing professionals will find that E-Z Auto Scoop Filling System meets the needs for capacities up to 750 fills per hour.

Cleaning Is A Snap

The live storage hoppers (capacities from .9 – 4.1 cu.ft.) lift off with no fasteners to remove. The entire assembly is fabricated from electro-polished 304 SS.

Reliable, Easy To Operate Controls

Change the target weight in seconds. No proprietary software. Worldwide service network.

© Martin Vibration System and Solutions, Inc. All rights reserved.

MARTIN® E-Z™ Auto Scoop Filling System

DIMENSIONS

					AIR CONSUMPTION CFM (L/MIN)		
A	B	C	D	E*	30PSI (2BAR)	60PSI (4.1BAR)	
30(762)	36(914)	36(914)	43(1092)	71(1803)	.49(14)	1.25(57)	
inches (mm)							

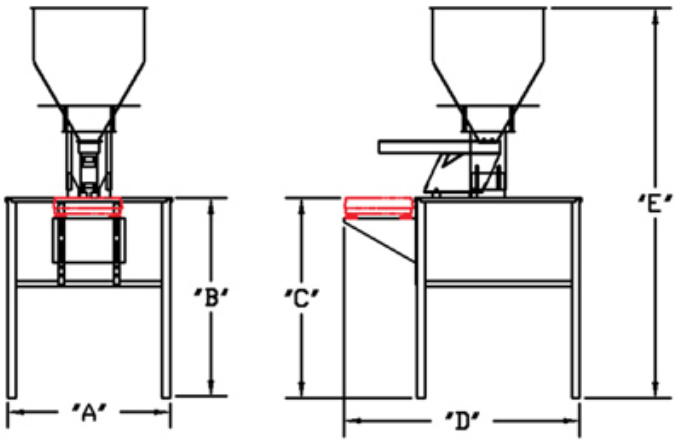

NOTE: ADD 3 5/8 INCHES FOR CASTERS

PHOTOS

Easy to operate controls | MARTIN® E-Z™ Auto Scoop Filling System

MARTIN® E-Z™ Auto Scoop Filling System

Dispenses fast and accurately.

MARTIN® E-Z™ Auto Scoop Filling System

© Martin Vibration System and Solutions, Inc. All rights reserved.

E-Z™ Vibratory Feeders

Powered by efficient pneumatic drives

MARTIN® E-Z™ Vibratory Feeders meet the needs of feeding applications up to 8 tph. The simple, all stainless steel fabrication is E-Z to clean, perfect for food, chemical and pharmaceutical applications. The drive and suspension components are designed to operate in hazardous or wet environments.

Units are available in various configurations:

1. Standard, “off-the-shelf” units.
2. Custom sizes.
3. Drive and suspension only.
4. Flat, vee or custom trays available.

FEATURES

Clean, Sanitary Design

Standard, all stainless steel fabrication, powered by a corrosion proof, coated drive. Ideal for food, chemical & pharmaceutical applications.

Explosion-Proof & Waterproof

No sparks or heat are generated by the pneumatic drive system. Totally sealed allowing vibratory feeders a safe wash-down.

Quiet & Energy-Efficient

Drive system operates at less than 65 dBA.
Uses 0.18 – 3.14 cfm.

Exact Adjustment

Speed and stroke are independently adjusted, providing exact control.

3-Year Guarantee

Drive unit is covered by a full 3-year guarantee.

On-Site Feeder Testing

Call us to test the E-Z™ Feeder System at your location.

© Martin Vibration System and Solutions, Inc. All rights reserved.

E-Z™ Vibratory Feeders

DIMENSIONS

								AIR CONSUMPTION CFM (L/MIN)	
	A	B	C	D	E	F	G	30PSI(2BAR)	60PSI(4.1BAR)
EZ 2 4X24	24(610)	4(102)	2(51)	8.25(210)	6.75(171)	2(51)	12(305)	.49(14)	1.25(57)
EZ 2 3X18	18(457)	3(76)	2(51)	8.25(210)	6.75(171)	2(51)	6(152)		
EZ 2 6X20	20(508)	6(152)	2(51)	8.25(210)	6.75(171)	2(51)	8(203)		
DRIVE ONLY	10.13(257)	3(76)	N/A	8.25(210)	6.75(171)	2(51)	N/A		
EZ 4 5X24	24(610)	5(127)	2(51)	8.25(210)	6.75(171)	2(51)	12(305)	.71(20)	2.11(99)
EZ 4 6X18	18(457)	6(152)	2(51)	8.25(210)	6.75(171)	2(51)	6(152)		
EZ 4 7X20	20(508)	7(178)	2(51)	8.25(210)	6.75(171)	2(51)	8(203)		
DRIVE ONLY	10.13(257)	4(102)	N/A	8.25(210)	6.75(171)	2(51)	N/A		
EZ 8 6X36	36(914)	6(152)	3(76)	8.25(210)	6.75(171)	2(51)	24(610)	.92(26)	2.4(110)
EZ 8 8X30	30(762)	8(203)	3(76)	8.25(210)	6.75(171)	2(51)	18(457)		
EZ 8 12X24	24(610)	12(305)	3(76)	8.25(210)	6.75(171)	2(51)	12(305)		
DRIVE ONLY	10.13(257)	6(152)	N/A	8.25(210)	6.75(171)	2(51)	N/A		
inches (mm)		Standard sizes listed above. Call 1-800-477-4634 for special configurations.							

E-Z™ FEEDER DIMENSIONS

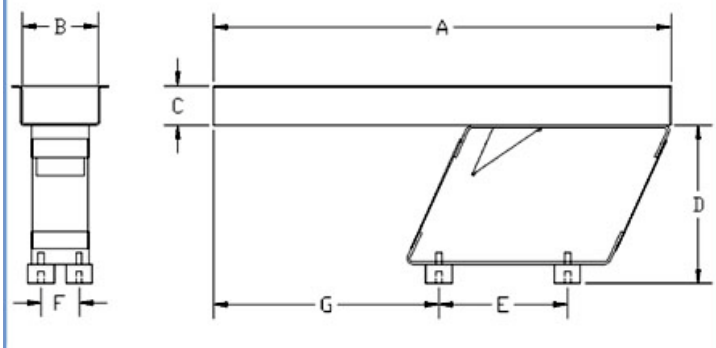

E-Z™ DRIVE ONLY

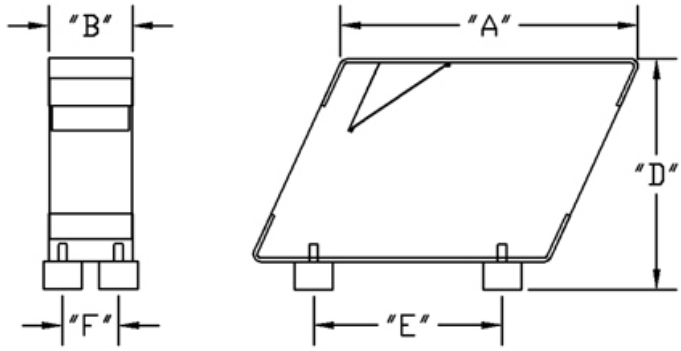

PHOTOS

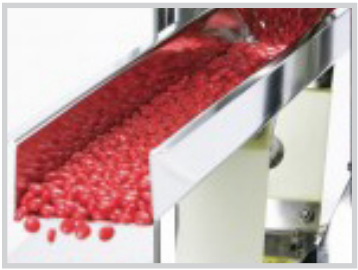

MARTIN® E-Z™ Feeder

MARTIN® E-Z™ Feeder

© Martin Vibration System and Solutions, Inc. All rights reserved.

POCKET ROCK-IT® RailCar Vibrators

Lightweight & quiet!

No more pounding on railcars with sledge hammers! No more lifting heavy vibrators! No more ear-splitting noise! The patented POCKET ROCK-IT® Railcar Vibrators utilize lightweight, high-performance vibrators to unload even the most stubborn materials from closed top hopper cars. Both models weigh less than 32 lbs., greatly reducing the risk of back injury.

No brackets on your cars? No problem!

We have a variety of MARTIN® VAC-MOUNT™ Vibrators that will do the job.

Pocket Rock-It® (U.S. Patent #5,833,205)	Pocket Rock-It II™
Weight -32 lbs.	Weight -22 lbs.
Air consumption-15 cfm.	Air consumption-34 cfm.
Noise 70-85 dBA.	Noise 60-85 dBA.
Included with unit –NTS 50/04 vibrator, wedge bracket with urethane shoe, 5' hose whip with 3-way valve, filter, lubricator and regulator.	Included with unit –NCT 250i vibrator, wedge bracket, 5' hose whip with 3-way valve, filter, regulator and ambient air dryer.

© Martin Vibration System and Solutions, Inc. All rights reserved.

POCKET ROCK-IT® RailCar Vibrators

FEATURES

Quiet

Noise levels are 60 - 75 dBA, well below regulatory limits.

Reduce Risk of Back Injury

The POCKET ROCK-IT® assembly weighs in at 32 lbs, POCKET ROCK-IT II® models tip the scales at 20 lbs. Operators no longer have to manhandle heavy vibrators into hard-to-reach brackets under railcars.

3-Year Guarantee

Both models are covered by a 3-year guarantee.

Free Trial

POCKET-ROCK-IT® railcar vibrators are available for testing, at your site, on your cars.

Additional Specifications

- Air pressure range: 30-80 psi
- Operating temperature: 0º-120º F
- Air Preparation: 5-micron filter, pressure regulator, lubricator & 3-way valve.
- Warranty: 3 years when operated within recommendations
- Testing: Both models are available for FREE on-site testing.

© Martin Vibration System and Solutions, Inc. All rights reserved.

Railcar Gate Openers

Open the toughest railcar gates safely & efficiently.

New and Improved with Pivoting Wheels! Great for tight locations!

The MARTIN® Adjustable-Height Railcar Gate Opener is a powerful solution to improve the efficiency of railcar unloading. It easily opens tough rail car hopper gates, safely and efficiently without backbreaking labor, without damage to gate or mechanism, and without high noise.

- No More Stalled Operations Due to Stubborn Gates
- No More Excess Labor Needed to Force Open Gates
- No More Back Injuries From Trying to Muscle Open Gates

FEATURES

Powerful Rail Car Gate Opener

Provides 2700 lbs of torque at 90 psi, (visualize a 200 lb. man standing on a 13 foot pry bar!) to open the most stubborn hopper car gate

Maneuverable

Wheeled cart can be positioned by one rail car worker. One lever rotates wheels 90 degrees. Pivoting wheels maintain contact with traveling capstan.

Adjustable Height

Change capstan height to fit various car gates and compensate for variations in unloading platforms.

Adjustable Width

Fits through narrow doors, spread to stabilize unit for operation.

Adjustable Handle

Easily adjusts to suit operator performance.

Steel Tube Frame

Rugged construction provides long life in "real world" conditions.

Durable Wheels

10" x 4" pneumatic wheels maneuver easily over rough rail side conditions.

Controlled

Provides smooth, non-impacting force to open gate without damage.

Quiet

Noise measured at 83 dBa at operator position.

Additional Specifications

- Air Supply: 90 to 120 psi (6.2 to 8.2 bar)
- Air Consumption: 18.5 to 20.5 cfm (8.7 to 9.7 L/sec)
- RPM at Drive Shaft at 90 psi (6.2 bar): 8.4
- Output Force at 90 psi (6.2 bar): 2700 lb (1225 kg)
- Noise Level (1 meter from muffler): 83 db
- Part Number: 38475
- Shipping Weight: 500 lbs (226.8 kg)

© Martin Vibration System and Solutions, Inc. All rights reserved.

Railcar Gate Openers

DIMENSIONS

DIMENSIONS—in. (mm)

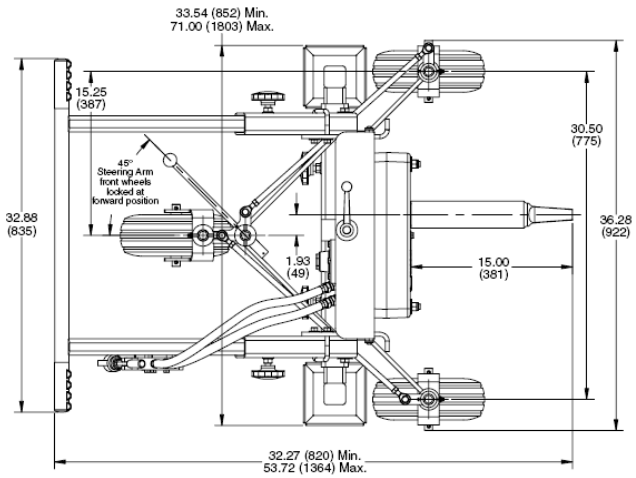

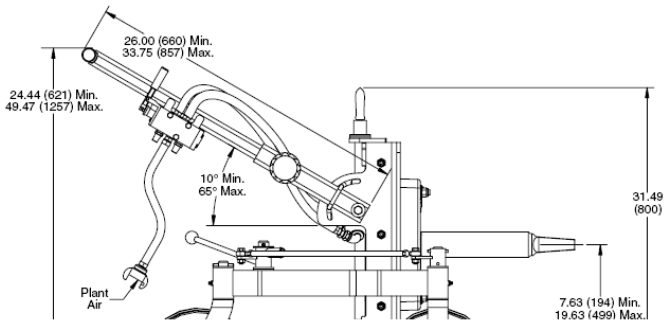

PHOTOS

MARTIN® Adjustable-Height Railcar Gate Opener delivers 2700 pounds of torque at 90 PSI to open tough gates efficiently, without excessive manual labor or damage to cars.

MARTIN® Adjustable-Height Railcar Gate Opener

Save time and money with a powerful pneumatic railcar opener, by expediting the opening and closing of stubborn railcar gates while reducing the risk of injury.

Our pneumatic opener is safe and easy-to-use

© Martin Vibration System and Solutions, Inc. All rights reserved.

BOOT-LIFT® Railcar Connectors

Unloading of covered railroad cars no longer has to be a time-consuming, hazardous, dirty job.

The BOOT-LIFT® Railcar Connector installs between the rails and provides a dust tight seal between the railcar discharge and the below grade conveying system, including vacuum systems.

Rough spot the car, adjust the BOOT-LIFT® Railcar Connector with either the manual or pneumatic aligner and actuate the lifting cylinders and your ready for clean, pollution free material transfer.

The air over hydraulic lifting cylinders automatically compensate for the leaning and rising of the railcar. **Combine the BOOT-LIFT® Railcar Connector with a MARTIN® Railcar Opener and a POCKET ROCK-IT® Vibrator for the optimum in safe, efficient railcar unloading.**

BOOT-LIFT® Railcar Connectors help to reduce material-loss, curb air pollution, reduce unloading times, cut housekeeping costs, and only 1 cfm of air is required!

FEATURES

Replaceable Foam Seals

All BOOT-LIFT® Railcar Connectors come with replaceable foam seals that ensure a positive seal even on vacuum systems.

Benefits

- Reduce Material Loss
- Curb Air Pollution
- Reduce Unloading Times
- Cut Housekeeping Costs!
- Only 1 CFM of Air Required

DIMENSIONS

	A	B	C	D	E	F
SBL-24	57	18.5	40.63	54	29.2	22
SBL-30	57	18.5	48.6	54	37.3	30
SBL-33	57	18.5	51.4	54	40.3	33
SBL-35	57	18.5	53.9	54	42.4	35
SBLR-18	57	18.5	36.38	54	23.1	15 (dia)
inches(mm)						

	A	B	C	D	E	F
DBL-18	57	18.5	40.63	54 - 69	29.2	22
DBL-18-GATX	57	18.5	48.6	54 - 76.6	37.3	30
inches(mm)						

© Martin Vibration System and Solutions, Inc. All rights reserved.

BOOT-LIFT® Railcar Connectors

BOOT-LIFT® SBL Connector

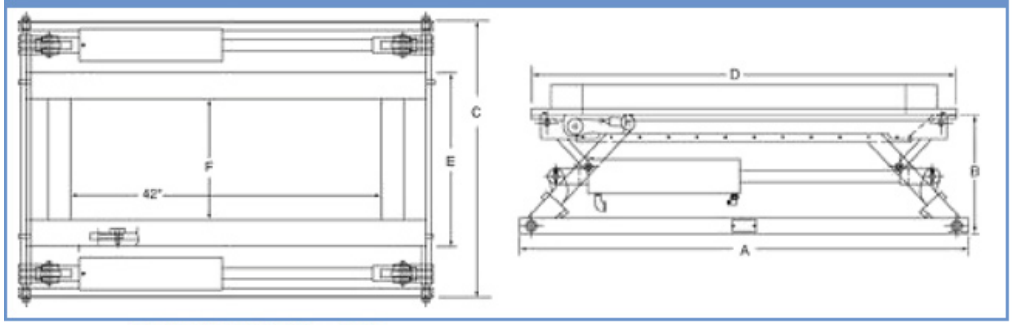

Retracted height = 5.5"

BOOT-LIFT® DBL Connector

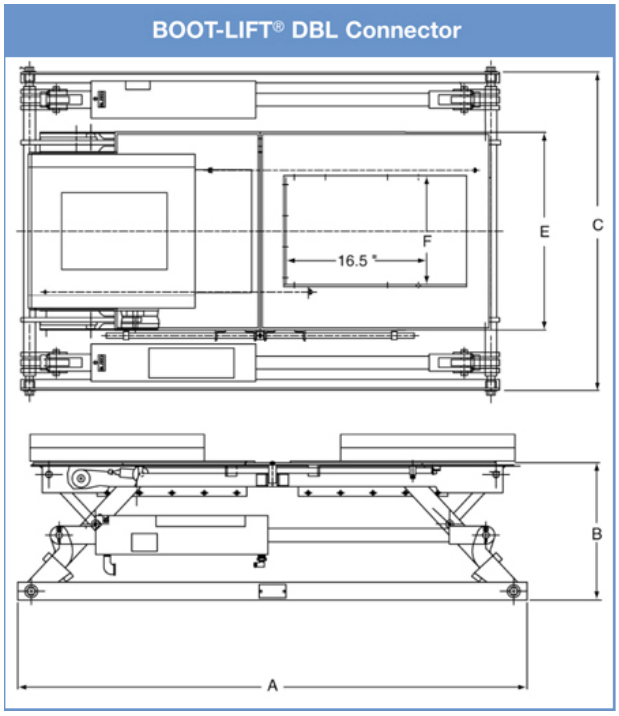

PHOTOS

MARTIN® SBL BOOT-LIFT® Connector

DBL-18 BOOT-LIFT® Connector

BOOT-LIFT® Vertical Connector

© Martin Vibration System and Solutions, Inc. All rights reserved.

MARTIN® PKL® Interval Impactors

MARTIN® PKL® Interval Impactors generate individual blows similar to a hammer. The impact provides very high acceleration, the exact force required to move sticky or clinging materials from storage vessel walls. The impacts per minute are variable between 10 and 60, without the use of a timing device.

The superb controllability of the MARTIN® PKL® Interval Impactors ensures just the right force to do the job, reducing noise, energy costs and bin damage.

FEATURES

High Acceleration

The impact provided by MARTIN® PKL® Interval Impactors moves material that will not respond to rotary vibration.

Extremely Low Energy Consumption

The low operating frequency combined with the "air-against-spring" design translates to extremely low energy costs.

Precise Control

Adjust the number of impacts to provide the right force to do the job–no wasted energy, no bin or hopper damage. This is the most controllable vibrator available.

Best Uses

- Removing sticky materials from bin walls.
- Cleaning dusty residue from surfaces.
- Breaking "bridged" material.
- Great for spray dryers, pipes and dust collectors!

Additional Specifications

- Air Pressure Range: 45-115 psi.
- Operating Temperature: Max. 250°. High-temp models 320°F.
- Air Preparation: 5-micron filter, pressure regulator & lubricator.
- Force (maximum): 120-1,700 in-lbs.
- Warranty: 3 years when operated within recommendations.

© Martin Vibration System and Solutions, Inc. All rights reserved.

MARTIN® PKL® Interval Impactors

DIMENSIONS

	A		B		C		D		E		F	G		H	
Body Size	IN.	MM	IN.	MM	IN.	MM	IN.	MM	IN.	MM	NPT	IN.	MM	IN.	MM
PKL 190	1.50	38	4.37	111	0.59	15	0.35	9	-	-	1/8	3.54	90	6.57	167
PKL 450	2.83	72	4.72	120	0.55	14	0.51	13	-	-	1/8	3.54	90	8.03	204
PKL 740	3.54	90	5.12	130	0.59	15	0.49	12.5	1.97	50	1/8	3.94	100	9.45	240
PKL 2100	4.72	120	7.09	180	0.67	17	0.51	13	-	-	1/8	5.98	152	11.89	302
PKL 5000	4.49	114	7.09	180	0.87	22	0.67	17	-	-	1/8	5.98	152	14.84	377
PKL 240	4.49	114	7.09	180	1.06	27	0.67	17	-	-	1/8	5.98	152	15.94	405

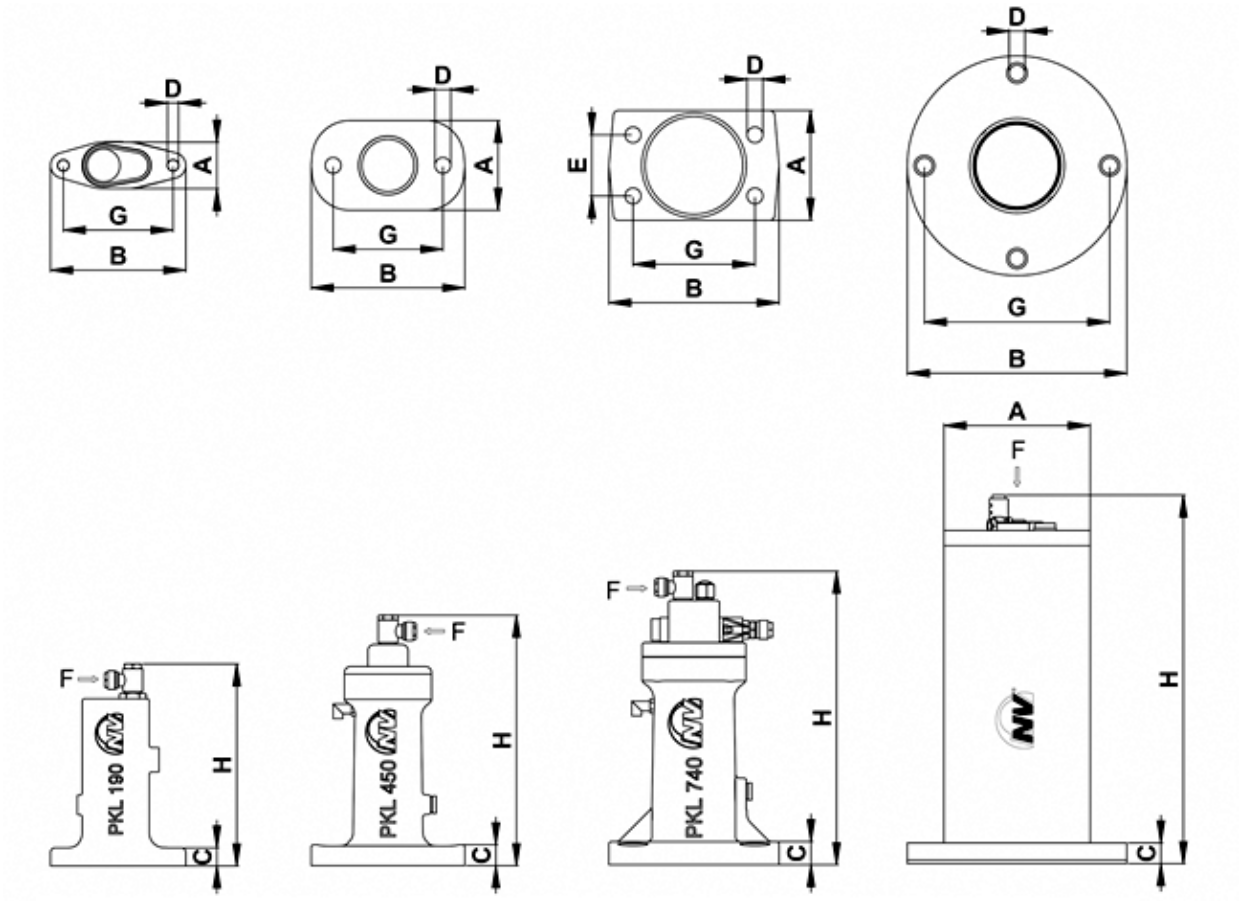

© Martin Vibration System and Solutions, Inc. All rights reserved. • www.shake-it.com • sales@shake-it.com • 990 Degurse Ave Marine City, MI 48039

MARTIN® PKL® Interval Impactors

PERFORMANCE

	PISTON WEIGHT		IMPACT FORCE*		AIR PRESSURE OPTIMUM		AIR CONSUMPTION PER IMPACT		TOTAL WEIGHT		RECOMMENDED WALL THICKNESS	
MODEL	LB	KG	LB	KG	PSI	BAR	CF	LITER	LB	KG	IN	MM
PKL 190/4	0.4	0.2	0.95	0.43	58	4	0.003	0.09	1.8	0.8	.04-.08	1-2
PKL 190/6	0.4	0.2	1.32	0.60	87	6	0.005	0.14	1.8	0.8	.04-.08	1-2
PKL 450/4	1.0	0.5	1.23	0.56	61	4.2	0.005	0.13	3.3	1.5	.04-.12	1-3
PKL 450/6	1.0	0.5	2.02	0.92	86	5.9	0.006	0.18	3.3	1.5	.04-.12	1-3
PKL 740/4	1.6	0.7	4.0	1.8	59	4.1	0.013	0.38	5.7	2.6	.08-.16	2-4
PKL 740/6	1.6	0.7	5.9	2.7	86	5.9	0.019	0.54	5.7	2.6	.08-.16	2-4
PKL 2100/4	4.6	2.1	9.2	4.2	58	4	0.054	1.55	17	7.8	.12-.2	3-5
PKL 2100/5	4.6	2.1	13.9	6.3	73	5	0.068	1.93	18	8	.12-.2	3-5
PKL 5000/4	11	5	14.5	6.6	58	4	0.053	1.5	35	16	.16-.32	4-8
PKL 5000/6	11	5	23.8	10.8	87	6	0.077	2.2	35	16	.24-.48	6-12
PKL 240/4	23	11	27.3	12.4	58	4	0.070	2	53	24	.39-.48	10-12
PKL 240/6	23	11	36.5	16.6	87	6	0.105	3	53	24	>.48	>12

* Impact force corresponds with listed weight dropped from 3'.

PHOTOS

MARTIN® PKL® Interval Impactor 150 on transfer pipe

MARTIN® PKL® Interval Impactor 150 above rotary valve.

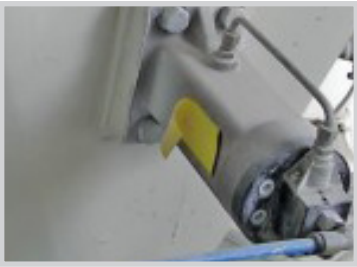

MARTIN® PKL® Interval Impactor 150 on chute.

MARTIN® PKL® Interval Impactor 150 on spout.

MARTIN® PKL® Interval Impactor 125 on fill spout.

MARTIN® PKL® Interval Impactor 135 on cone.

MARTIN® PKL® Interval Impactor 150 on large tank.

MARTIN® PKL® Interval Impactor 150 on fill spout.

© Martin Vibration System and Solutions, Inc. All rights reserved.

E-Z™ Air Preparation Packs

Proper air preparation extends the life of vibrators, allows for precise control and reduces air consumption. All of our filters are equipped with 5-micron filter elements.

We have control systems available for both Electric and Pneumatic Systems.

Call us for technical information regarding air preparation and controls.

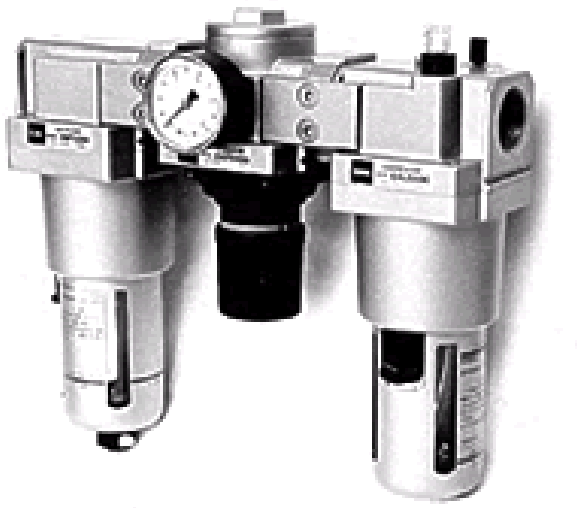

FEATURES

Air Preparation Packs 1

- 5-micron filter
- Pressure regulator with gauge
- Lubricator where required

Air Preparation Packs 2

- 5-micron filter
- Pressure regulator with gauge
- Lubricator where required
- Manual control valve

Air Preparation Packs 3

- 5-micron filter
- Pressure regulator with gauge
- Lubricator where required
- Electric solenoid valve

PERFORMANCE

			AIR PREP PACK #1 WITH NO CONTROL VALVE	AIR PREP PACK #2 WITH MANUAL CONTROL VALVE	AIR PREP PACK #3 WITH ELEC. SOLENOID VALVE
MODELS	LUBE REQ'D	PORT SIZE	PART #	PART #	PART #
NTS 120 HF - 250 NF	NO	1/8	62018	56006	56007
NTS 350 HF - 350 NF	NO	1/4	62014	56008	56009
NTS 100/01	NO	1/4	62014	56008	56009
NTS 75/01 - NTS 50/01	YES	1/4	52014	56002	56003
NTS 70/02 - NTS 50/10	YES	3/8	52038	56004	56005
NTK 8 AL - NTK 18 AL	NO	1/8	62018	56006	56007
NTK 18 ALKV - NTK 25 ALKV	NO	1/8	62018	56006	56007
NTK 25 AL - NTK 40 AL	NO	1/4	62014	56008	56009
NTK 55 AL	NO	3/8	62038	56010	56011
NTK 15 - NTK 16	YES	1/8	52018	56000	56001
NTK 25 - NTK 40	YES	1/4	52014	56002	56003
NTK 55 - NTK 110	YES	3/8	52038	56004	56005
ALL PKL MODELS	YES	1/4	52014	56002	56003
NTP 25	NO	1/8	62018	56006	56007
NTP 32	YES	1/4	52014	56002	56003
NTP 48	YES	3/8	52038	56004	56005
NCT 1 - NCT 4I	NO	1/8	62018	56006	56007
NCT 5 - NCT 29I	NO	1/4	62014	56008	56009
NCT 55 - NCT 108I	NO	3/8	62038	56010	56011
NCB 1 - NCB 2	YES	1/8	52018	56000	56001
NCB 3 - NCB 20	YES	1/4	52014	56002	56003
NCB 50 - NCB 70	YES	3/8	52038	56004	56005
UCV BD CV DV MODELS					
6 - 10 - 13	YES	1/8	52018	56000	56001
16 -19 - 25 - 35	YES	1/4	52014	56002	56003
38 - 41 - 51	YES	3/8	52038	56004	56005
44	YES	1/2	52012	56012	56014
inches(mm)					

© Martin Vibration System and Solutions, Inc. All rights reserved.